ESTERLINE ANGUS
S-22906 & S-22907
SERVICING

ESTERLINE ANGUS

AN ESTERLINE COMPANY

SERVICING DOCUMENTATION

FOR

MODELS S-22906 AND S-22907

AMMETER-VOLTMETER RECORDERS

PROPRIETARY INFORMATION

304D10/11S
M1182

SECTION 1

PRODUCT LITERATURE

MINISERVO III®

POWER SURVEY DEMAND RECORDERS

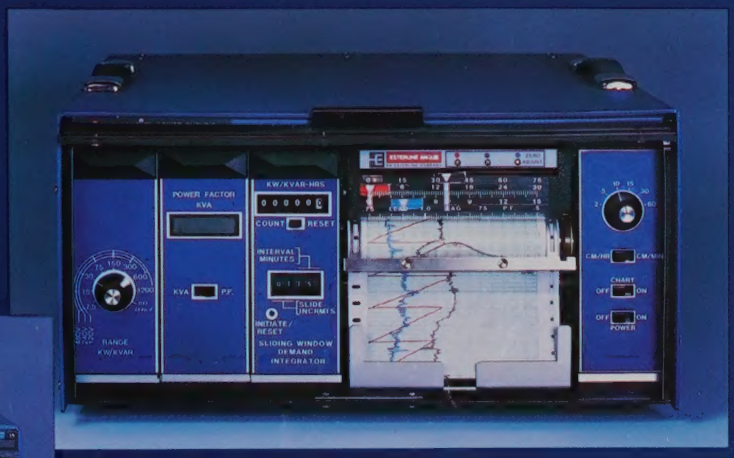

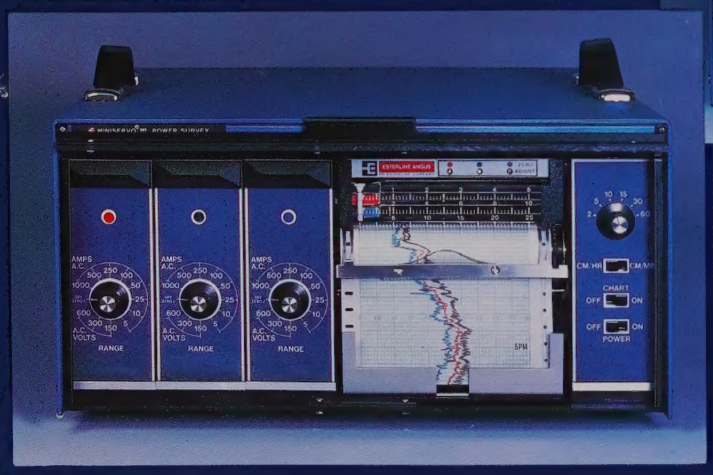

POWER SURVEYS ARE THE FIRST STEP TO ENERGY SAVINGS!

ESTERLINE ANGUS

AN ESTERLINE COMPANY

DETERMINE THE ANSWER TO ACHIEVING ENERGY SAVINGS.

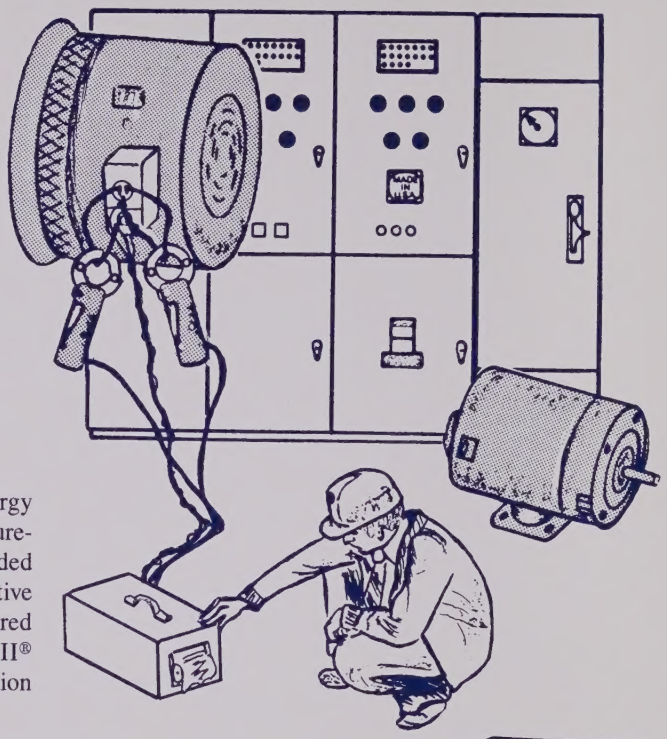

Rising electrical costs and energy conservation programs have made energy audits a necessity in industrial and commercial facilities. Meter measurements alone, while relatively inexpensive, cannot provide the insight needed to detect intermittent problems and pinpoint areas that need corrective action. It takes a continuous trend recording to capture the data required to optimize the use of electrical power throughout a facility. Miniservo III® Power Survey Demand Recorders (PSDR) deliver the in-depth information necessary to conduct a *complete* electrical energy audit.

From the main service entrance—to branch distribution panels—to individual loads (motors, lighting, etc.)—Miniservo III® Power Survey Demand Recorders provide comprehensive measurement recordings of: Amps, Volts, kW, Power Factor (PF), kVA, kvar, kWh and Demand. All Miniservo III® Power Survey Demand Recorders are equipped to accept 1mA or 1V DC input for recording other measurement parameters from a wide variety of transducers. PSDR instruments feature a reliable, servo-system design and are housed in NEMA II, drip-proof, case enclosures to ensure operational integrity in field-measurement applications. Color-coded connections provide easy field hookup of power measurements for a combination of single- and/or three-phase power networks. A wide selection of models are offered to suit your needs and budget.

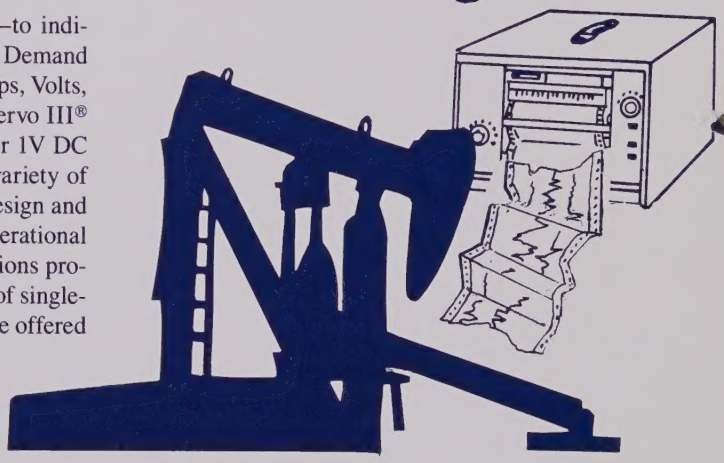

S22907-1-60

SINGLE-CHANNEL AC AMMETER/VOLTMETER

This economical, single-channel recorder continuously monitors and records switch-selectable voltages to 600V AC, or currents to 1000A AC*. This versatile instrument features a switch-selectable, 12-speed chart drive; optional full-range adjustable alarm; and an optional event pen. Optional current transformers are available to extend the current measurement ranges to 2000 and 3000A AC. Available current transformers (required for current measurement) are described on page 7. By using accessory transducers with a 0-1mA or 0-1V DC output, other parameters such as Watts, Vars, Frequency, Power Factor, Temperature and Pressure can be recorded. See page 6 for detailed technical specifications of the Single-Channel AC Ammeter/Voltmeter.

**Optional current transformers are required for current measurement.*

THREE-CHANNEL AMMETER/VOLTMETER

The Three-Channel Ammeter/Voltmeter provides three continuous recordings of voltage, current, or a combination of both. It is ideal for phase comparison of voltage or current in a three-phase, three-wire or four-wire system. The recorder has switchable chart speeds and switchable ranges to 600V AC and 1000A AC*. Options include a full-range adjustable alarm for each channel and a single event pen. A selection of current transformers (required for current measurement) is available to extend current measurement ranges to 2000 and 3000A AC (see page 7). Other parameters such as Watts, Vars, Frequency, Power Factor, Temperature and Pressure can be recorded by using accessory transducers. Detailed technical specifications on the Three-Channel Ammeter/Voltmeter are found on page 6.

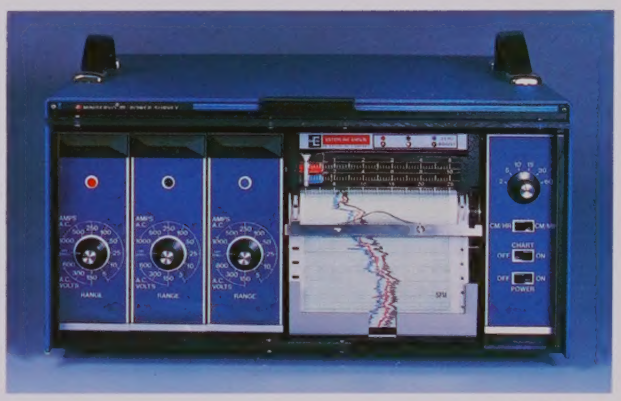

S22906-1-60

EASY TO USE, EASY TO CONNECT

Miniservo III® Power Survey Demand Recorders are designed for ease in hookup and operation. Terminal blocks, cables and plug-in connectors for current transformers are color coded to ensure proper connection. Fast hookup is facilitated by the use of simple connectors: crocodile clips and spade connectors for voltage leads; banana plugs and a two-pin connector for current transformer leads. Easy-to-replace, fiber-tipped pen cartridges deliver consistently sharp writing with no clogging. Z-fold charts fold neatly for convenient storage and reference.

S22906-1-60 REAR VIEW

SPECIAL APPLICATIONS

Meeting special customer requirements has long been a valued tradition at Esterline Angus. Power survey demand recorders are available with a variety of options to suit a customer's needs. Recorders for 50 and 400Hz are also available.

Pictured right is a special package featuring three ammeter/voltmeter modules mounted on a chassis base. This low-cost, compact unit may be used in conjunction with other power survey demand recorders to increase the measurement flexibility of your power-analysis system. Other combinations of PSDR power modules can be packaged to meet specific requirements. For detailed specifications on power survey demand recorders and the options and accessories available, see pages 6 and 7.

**Optional current transformers are required for current measurement.*

WANT TO KNOW THE ANSWER TO ACHIEVING ENERGY SAVINGS?

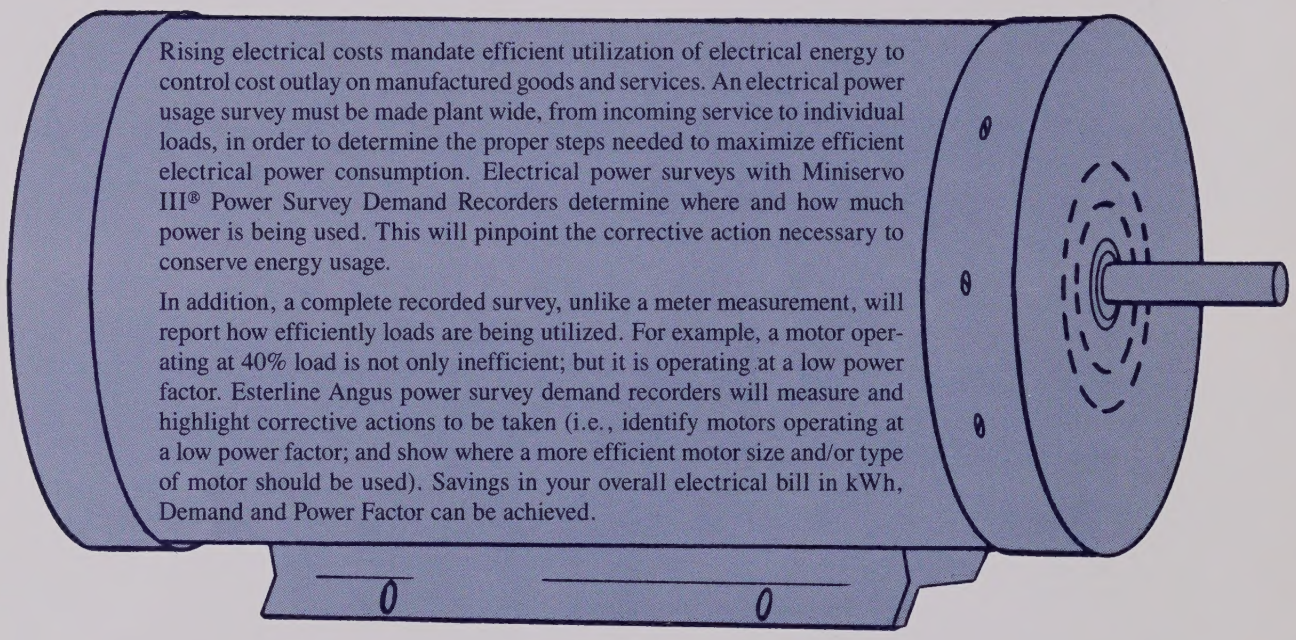

Rising electrical costs mandate efficient utilization of electrical energy to control cost outlay on manufactured goods and services. An electrical power usage survey must be made plant wide, from incoming service to individual loads, in order to determine the proper steps needed to maximize efficient electrical power consumption. Electrical power surveys with Miniservo III® Power Survey Demand Recorders determine where and how much power is being used. This will pinpoint the corrective action necessary to conserve energy usage.

In addition, a complete recorded survey, unlike a meter measurement, will report how efficiently loads are being utilized. For example, a motor operating at 40% load is not only inefficient; but it is operating at a low power factor. Esterline Angus power survey demand recorders will measure and highlight corrective actions to be taken (i.e., identify motors operating at a low power factor; and show where a more efficient motor size and/or type of motor should be used). Savings in your overall electrical bill in kWh, Demand and Power Factor can be achieved.

WATT/VAR TIME SHARE RECORDER

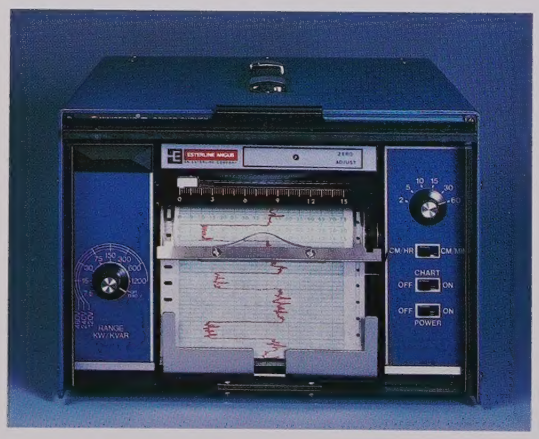

S22905-1-60

The Esterline Angus Miniservo III® Watt/Var Time Share Recorder provides an economical way to continuously measure AC Watts and/or AC Vars using single-channel servo recorder*. Three measurement modes of operation are available: Watts only, Vars only, or a time share between Watts and Vars. In the time-share mode, the recorder output is automatically switched between Watts and Vars at given time intervals of 10 minutes for Watts and 5 minutes for Vars. Records derived from this recorder permit calculation of such important parameters as Power Factor, Volt/Amperes, Demand, Watt hours and Var hours.

The recorder (S22905-1) pictured, with optional clamp-on current transformers, accepts voltage to 600V AC, and current to 1000A AC* (with a standard 1000:1 current transformer). See current transformers on page 7. For measurement with panel/switchboard type CTs, a recorder (S23002-1) is available with a direct 5A AC input. Detailed specifications on Watt/Var Time Share Recorders are found on page 6.

**Optional current transformers are required for current measurement.*

kW/kVar/kVA/DEMAND/PF

Power Survey Demand Recorders (PSDR) to measure kW, kVar, kWh, kVA, Demand and PF are available in one basic recorder package*. This versatile recorder permits simultaneous measurement of any combination of three parameters. Additionally, an LCD display provides a readout of either Power Factor or kVA depending on the switch setting—with kWhs or kVarhs directly readable on a resettable electromechanical counter located on the Demand module. Also, this recorder has both a 0-1mA and 0-1V DC input for each recording channel, thus providing the capability to interface with peripherals.

The segment of chart pictured shows kW (black), kW Demand (red) and PF (blue). These selected parameters are continuously being recorded so values at any point in time can be examined. This record also allows for easy determination of peak demand and trends in instantaneous kW and PF.

S22904-1-60

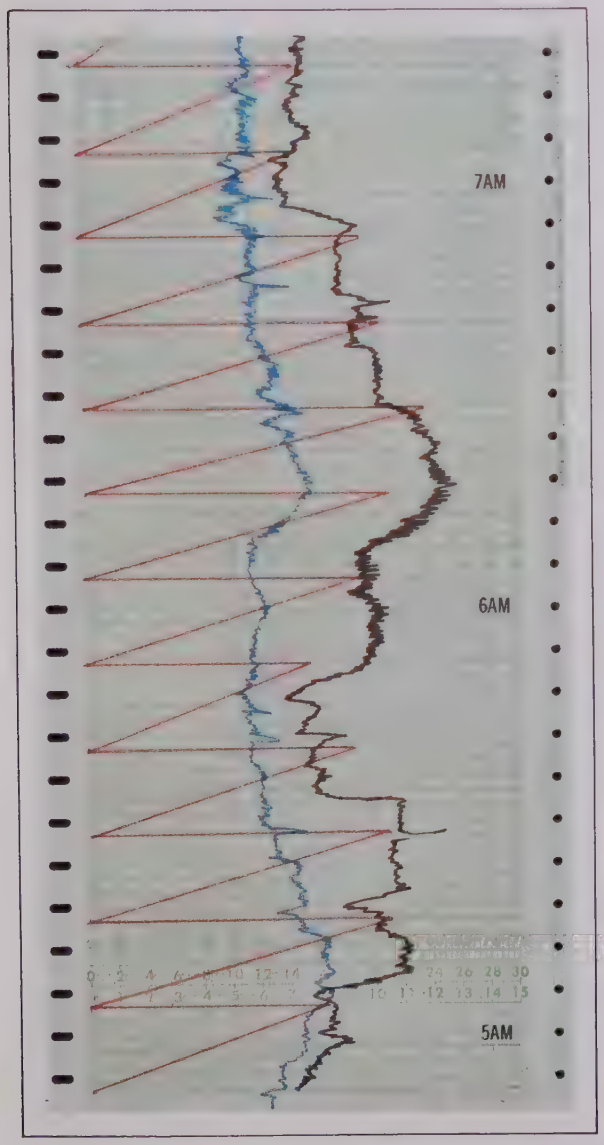

ACTUAL CHART SEGMENT

SLIDING WINDOW DEMAND INTEGRATOR

The S22989-1 pictured (below) has a "Sliding Window" Demand Integrator module. This module's features provide the added flexibility of adjustable slide increments (windows) during the integration period (demand) to coincide with utilities using the sliding-window concept. With the addition of the alarm option, the integrator provides a contact closure at a set demand level and can be utilized to provide further alarm annunciation for load shedding of certain electrical power equipment to avoid penalty billing from the electric utility company. The Integrator and VA/PF modules are available as separate panel-mounted units. This unit (S22989-1) requires the use of clamp-on current transformers. The S23004-1 (not pictured) is available with a direct 5A AC input from existing switchboard current transformers. See page 7 for more information on current transformers.

S22989-1-60

Optional current transformers are required for current measurement.

SPECIFICATIONS

Specification Number	S22907-1-†	S22906-1-†	S22905-1-†	S22904-1-†	S22989-1-†	S23002-1-†	S23004-1-†
Analog Recording Accuracy (±)							
AC Current	2.5%*	2.5%*	N/A	N/A	N/A	N/A	N/A
AC Voltage	2.0%	2.0%	N/A	N/A	N/A	N/A	N/A
DC Current	0.5%	0.5%	0.5%	0.5%	0.5%	0.5%	0.5%
DC Voltage	0.5%	0.5%	0.5%	0.5%	0.5%	0.5%	0.5%
Watts	N/A	N/A	2.2%*	2.2%*	2.2%*	1.1%**	1.1%**
Vars	N/A	N/A	2.3%*	2.3%*	2.3%*	1.1%**	1.1%**
kW Demand	N/A	N/A	N/A	2.7%*	2.7%*	N/A	1.6%**
kVar Demand	N/A	N/A	N/A	2.8%*	2.8%*	N/A	1.6%**
kVA	N/A	N/A	N/A	3.0%*	3.0%*	N/A	1.9%**
kVA Demand	N/A	N/A	N/A	3.5%*	3.5%*	N/A	2.3%**
Power Factor	N/A	N/A	N/A	3.2%*	3.2%*	N/A	2.1%**
Display Accuracy							
kWh	N/A	N/A	N/A	1.7%*	1.7%*	N/A	.6%**
kVarh	N/A	N/A	N/A	1.8%*	1.8%*	N/A	.6%**
kVA	N/A	N/A	N/A	2.5%*	2.5%*	N/A	1.4%**
PF	N/A	N/A	N/A	2.7%*	2.7%*	N/A	1.65%**
Inputs—(Maximum)							
AC Voltage	600V AC	600V AC	600V AC	600V AC	600V AC	600V AC	600V AC
DC Voltage	1V DC	1V DC	1V DC	1V DC	1V DC	1V DC	1V DC
AC Current	1A AC***	1A AC***	1A AC***	1A AC***	1A AC***	5A AC††	5A AC††
Power Requirement	115/230V AC, ±10%; 50 or 60Hz (20VA)	115/230V AC, ±10%; 50 or 60Hz (30VA)	115/230V AC, ±10%; 50 or 60Hz (20VA)	115/230V AC, ±10%; 50 or 60Hz (30VA)	115/230V AC, ±10%; 50 or 60Hz (30VA)	115/230V AC, ±10%; 50 or 60Hz (20VA)	115/230V AC, ±10%; 50 or 60Hz (30VA)
Approximate Weight	12lbs (5.4kgs)	23.5lbs (10.7kgs)	16.5lbs (7.5kgs)	28lbs (12.7kgs)	28lbs (12.7kgs)	16.5lbs (7.5kgs)	28lbs (12.7kgs)
Approximate Case Dimensions	10x7x17⅜" (25.4x17.8x44.1cm)	14⅛x7x19" (35.9x17.8x48.3cm)	10x7x17⅜" (25.4x17.8x44.1cm)	14⅛x7x19" (35.9x17.8x48.3cm)	14⅛x7x19" (35.9x17.8x48.3cm)	10x7x17⅜" (25.4x17.8x44.1cm)	14⅛x7x19" (35.9x17.8x48.3cm)
Ambient Temperature Limits	0-50°C for normal operation						
Chart	10cm calibrated width, Z-fold; 5cm folds, 20m long						
Chart Drive	12-speed, stepper-motor chart drive; speeds of 2,5,10,15,30,60cm/hr and cm/min						
Deadband	0.2% of span (maximum), sensitivity 0.1% of span						
Feedback Pot	Conductive plastic, sealed and shielded, 0.25% independent linearity						
Pen Lifter	Mechanical type						
Servo Response	0.5 second full scale						
Scale	Clear plastic						
Servo Motor	Sealed, permanently lubricated DC servo motor						
Zero Adjustment	Front panel control						
Writing System	Disposable fiber-tip ink cartridge						

†Suffix -60 for 60Hz; suffix -50 for 50Hz.

**Accuracy includes ±0.5% servo system accuracy and ±1.0% CT accuracy at 150kW/kvar range. System accuracy dependent on range and CT selected.*

***Accuracy includes ±0.5% servo system accuracy at 4.5kW/kVar range. System accuracy is dependent on range and CT selected.*

****Output at secondary of clamp-on CT; primary ratings through 3000A AC (maximum) available.*

††Direct AC input from existing switchboard current transformers.

N/A Not applicable

OPTIONS AND ACCESSORIES

CARRYING CASE

Carrying case stores recorder, clamp-on current transformers, and other accessories.

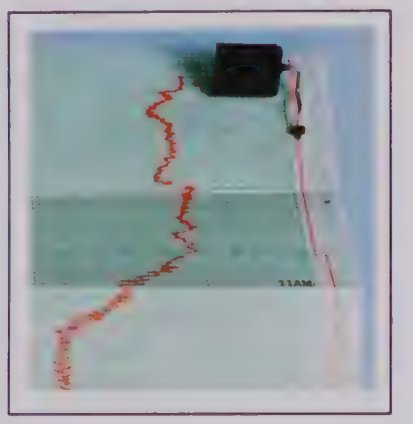

EVENT PEN

Event pen utilizes a self-contained, fiber-tipped, disposable-ink cartridge. Pen provides an "on-off" record of an external input (e.g.; critical process, condition of the motor). Optional input actutions include: 120 or 240V AC; 6, 12 or 24V DC; dry-contact closure (internal voltage source supplied).

ALARM

Alarm option allows for full-range adjustable alarm with one setpoint for each channel. Relay contacts are rated 2A @ 115V AC.

CURRENT TRANSFORMERS

OUTLINE DIMENSIONS

Power survey demand recorders are scaled for standard transformer 812D13 having a ratio of 1000-ampere primary to 1-ampere secondary. Designated clamp-on current transformers are shown below. These transformers feature plug-in connections.

TRANSFORMER	RATIO	ACCURACY (±)
812D13	1000:1A	1%
804A922	100:1A (50A primary limit)	2%
804D918	1000/2000/3000:1A	2%

804A922

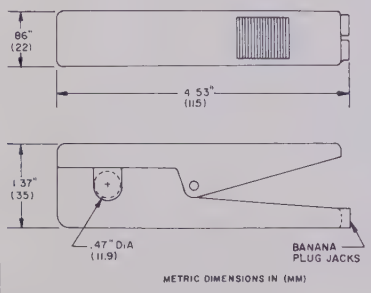

812D13

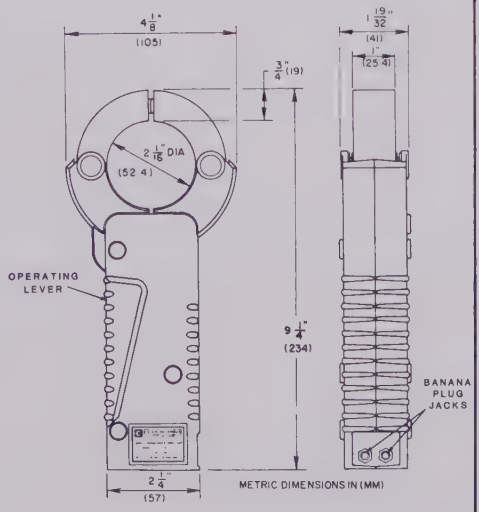

804D918

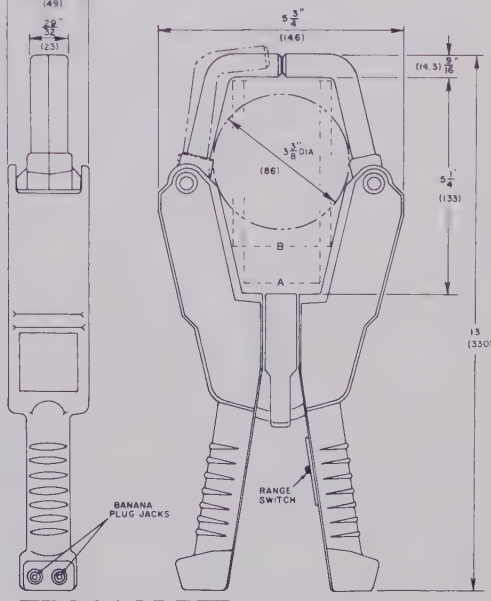

BUS BAR	A LINES	B LINES
DEPTH	4.75" (120)	3.94" (100)
WIDTH	1.75" (45)	2.19" (55)

Free Power Survey Analysis Seminars

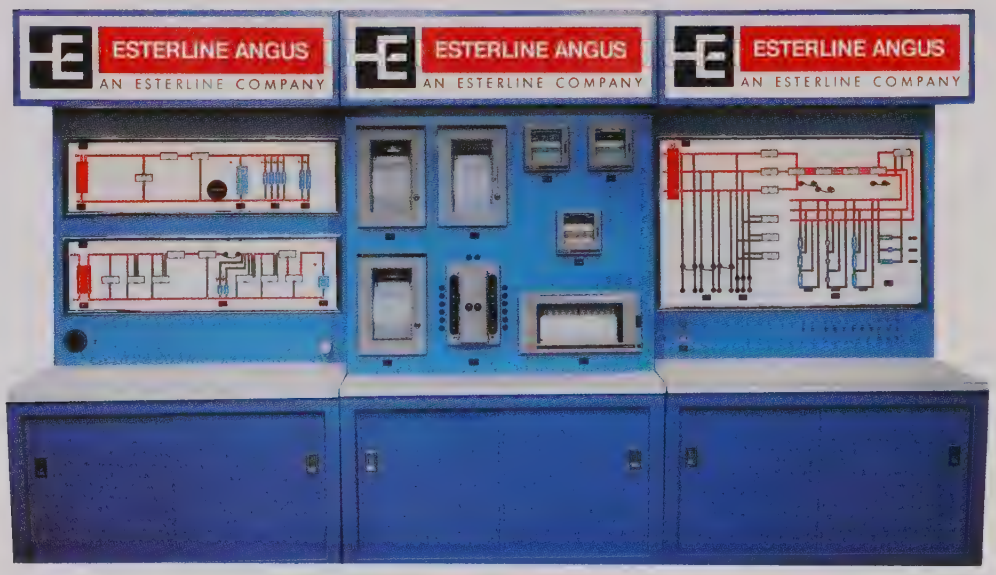

A must for everyone concerned with rising electrical energy costs! The Esterline Angus free one-day seminar is designed to assist you in auditing electrical power usage in your own facility.

The program focuses your attention on key areas where electrical power is wasted, or where electrical power can be utilized more effectively. You'll be taught electrical theory and receive practical hands-on experience by working with the unique Power Load Simulator designed to show you how to pinpoint typical power problems. Esterline's power application experts will show you what to do, and even more important, why and how you should do it. From this one day seminar, you'll gain the training necessary to conduct practical power surveys in your facility to save wasted energy dollars.

During the seminar, demonstrations of electrical loading parameters are vividly displayed on the Power Load Simulator. The Simulator includes: single- and three-phase networks to show the effects of power factor as it relates to wires, feeders, incoming plant capacity, AC amperes and excess energy used.

Power Survey Analysis Seminars are conducted regularly. For more information about learning how to survey your facility's electrical energy usage, contact: Esterline Angus Instrument Corporation, Box 24000, Indianapolis, IN 46224. Or call: 317-244-7611.

FIELD SERVICE

Esterline Angus has field service locations worldwide for calibration and repair on all Esterline Angus instruments, plus other lines of instruments—on-site or in-the-shop: Boston, NY/NJ, Philadelphia, Chicago, Houston, Los Angeles, plus factory service in Indianapolis. Authorized service reps in many locations. Call Esterline Angus Field Service Manager 317-247-9164.

Esterline Angus Instrument Corporation
P.O. Box 24000
Indianapolis, IN 46224
Tel: 317-244-7611
Cable: ESTANGO
Telex: 027-419

ESTERLINE ANGUS
AN ESTERLINE COMPANY

SECTION 2

OPERATING INSTRUCTIONS MANUAL

OPERATING INSTRUCTIONS

FOR

MINISERVO® III

AC AMMETER - VOLTMETER

POWER SURVEY DEMAND RECORDERS

3-Phase Model Shown

SAFETY PRECAUTIONS

Instrumentation described in this document is to be operated indoors and by qualified personnel only. To prevent shock and fire hazards, all electrical connections to the recorder and to measured power lines must be made in compliance with the National Electrical Code (ANSI C1). Always inspect insulation of CTs and input leads; if worn, cracked or chipped, replace before use.

ESTERLINE ANGUS

AN ESTERLINE COMPANY

CONTENTS

SECTION 1 -- INSTRUMENT DESCRIPTION — PAGE

1.1 INTRODUCTION ii
1.2 SPECIFICATIONS 1
1.3 PRINCIPLES OF OPERATION 3

SECTION 2 -- INSTALLATION

2.1 UNPACKING INSTRUCTIONS 4
2.2 INSTRUMENT MOUNTING 6
2.3 OPERATING POWER 6
2.4 CHART INSTALLATION 7
2.4.1 Charting Procedure 7
2.5 INK CARTRIDGE INSTALLATION 7
2.5.1 Inking Procedure 8
2.6 POWER AND GROUND WIRING 8
2.7 SIGNAL CONNECTIONS 8

SECTION 3 -- OPERATION

3.1 GENERAL 10
3.2 RECORDING CONTROLS 10
3.2.1 Front Panel Controls 10
3.2.2 Rear Panel Controls 10
3.3 OPERATING PROCEDURES 10
3.3.1 AC Ammeter/Voltmeter 11
3.3.2 DC Signal Recording 11

SECTION 4 -- MAINTENANCE

4.1 GENERAL 12
4.2 INSPECTION 12
4.3 CLEANING 12
4.4 LUBRICATION 12
4.5 REPLACEMENT PARTS 12
SCHEMATIC DIAGRAMS 14

APPENDIX -- RECORDER OPTIONS

A1. ALARM ATTACHMENTS A1
A2. EVENT PEN ATTACHMENTS A2

1. INSTRUMENT DESCRIPTION

1.1 INTRODUCTION

a. Miniservo® III Power Survey Demand Recorders are compact strip-chart instruments specifically designed for measuring, indicating and recording AC power parameters. The two multirange Ammeter/Voltmeter recorders that are described in this manual include a clamp-on current transformer, voltage input connections and disposable ink cartridge for each recording channel. These portable bench-styled units also feature a multispeed chart drive and NEMA II drip-proof case with self-storing front Lexan door.

b. The one-pen servo recorder shown in Figure 1-1 is identified as Model MS411B (Specification No. S-22907-1), and it is primarily used to continuously record either AC current or AC voltage in single-phase power circuits. The three-pen recorder (Figure 1-2) is identified as Model MS413B (Specification No. S-22906-1), and it will simultaneously and continuously record three separate AC inputs in either one-, two-, or three-phase circuits.

c. Each recording channel is also equipped with rear panel connections for 0-1 milliamp and 0-1 volt DC inputs. These features permit the use of various external transducers for recording other parameters such as watts, vars, frequency, power factor, temperature or pressure.

d. To broaden application versatility and extend power measurement ranges, the AC current measurements can be made through use of any of the available clamp-on transformers listed in Table 1-1. These hand-held units allow the operator to make current-measuring connections to live circuits without the necessity of disconnecting load-line conductors. Each current transformer is designed with insulated handle grips and pivotal-frame jaws. Electrical connections between each transformer and the recorder is made with a 10-foot cable supplied in the accessory kit (see

© Esterline Angus Instrument Corporation, 1983

Table 1-1. Specifications for Optional Clamp-On Transformers That Can Be Used With Models MS411B and MS413B Recorders.

PART NUMBER	CURRENT RATIO	MAX. PRI. CURRENT	MAX. SEC. CURRENT	RECORDER RANGE FACTOR	RECORDER TABLE 1-2 ACCURACIES	SEE FOLLOWING INSTRUCTION SHEET SUPPLIED WITH TRANSFORMER:
812D13	1000:1	1000A	1A	x1**	Same	M812D13
804A922	100:1	50A	.5A	÷10**	Add 2%	M804A922
804D918	1000:1* 2000:1* 3000:1*	1000A 2000A 3000A#	1A 1A 1A	x1** x2** x3**	Add .5% Add .5% Add .5%	M804D918

*Switch selective. #Continuous rating of 3000A @ 25°C. Derate to 2300A @ 50°C.
**Current measurements only.

Table 4-2). A separate 10-foot connecting cable (in accessory kit) for voltage measurements is also supplied for each recording channel.

e. In the three-pen recorder, different color inks are used to distinguish between the overlapping channel traces; red is used for Channel A, black for Channel B, and blue for Channel C. Fluorescent red, black, and blue pen targets (pointers) are also painted on the front side of the ink cartridges to identify cartridge/channel colors and to visually indicate the respective channel's measurement value on the segmented scaleplate. Signal input leads and terminal blocks are color coded to match the red, black and blue channels. Each amplifier module and zero adjustment is also identified by a corresponding color dot.

f. A twelve-position RANGE selector switch is provided on the front panel of each Ammeter/Voltmeter module. Full-scale AC current ranges from 5 to 1000 amps, and AC voltage ranges from 150 to 600 volts are offered. The recorder chart drive is a twelve-speed system that permits the operator to select feed rates from 2 to 60 cm/hr or cm/min by actuation of front-panel switches. The recording strip chart is a Z-fold type with full 10 cm calibrated span; the chart pack is easily loaded into a slide-out tray at the front of the instrument.

1.2 SPECIFICATIONS

All electrical and mechanical characteristics of the standard Miniservo Ammeter/Voltmeter recorders are listed in Table 1-2.

Table 1-2. Technical Specifications.

INSTRUMENT TYPE:	
MS411B (Stock #S-22907-1)	Single-channel AC Ammeter/Voltmeter, strip-chart, servo recorder with clamp-on current transformer supplied. (See transformer options listed in Table 1-1).
MS413B (Stock #S-22906-1)	Three-channel AC Ammeter/Voltmeter, strip-chart, servo recorder. Three clamp-on current transformers supplied. (See transformer options listed in Table 1-1).
RECORDING SYSTEM:	
Method of Writing	Servo-controlled, disposable cartridge with integral marking tip and ink supply (per channel).
Step Response Time	Servo system 0.5 sec. FS; A/V module 1.0 sec. FS.
Pen Lifter	Manual front panel lever.
Chart Paper	Z-fold, rectilinear with 10cm active span; 20m long with 5cm folds.
Scaleplate	Removable transparent type with left-hand zero. 0-5, 10, 25 on 3-channels; 0-100 on single channel.
SIGNAL INPUT RANGES:	
AC Current (50/60 Hz)	0-5, 10, 25, 50, 100, 250, 500, 1000 Amps (rms). Also see application of range factors used with different transformers shown in Table 1-1. Front-panel selector switch provided.

(Continued)

Table 1-2. Technical Specifications (Continued).

AC Voltage (50/60 Hz)	0-150, 300, 600 Volts (rms) using 10-foot input cables supplied. Front-panel selector switch and internal isolation transformer provided.
DC Current (Wiring Option)	0-1mA. Servo amplifier input terminals and internal shunt resistance provided on rear panel.
DC Voltage (Wiring Option)	0-1V. Servo amplifier input terminals on rear panel.
Current Transformer	Clamp-on type with plug-in leads. See specifications in Table 1-1. Insulated for 600V AC and has open-circuit protection.
Connection Provisions	All inputs are terminated at rear panel. Detachable voltage-input and transformer cables are supplied.
MEASURING SYSTEM:	
Ammeter/Voltmeter Module	Multirange solid-state AC amplifier with signal isolation transformer for voltage inputs. Signal rectification and output filtering provided.
Servo Amplifier Module	All solid-state, null-balancing DC amplifier with input overload protection, zero offset adjustment, velocity damping, and power supply circuitry.
AC Accuracies (50/60Hz Sine Wave)	AC Volts ±2%; AC Amps ±2.5% plus additional percentage derate caused by transformer as indicated in Table 1-1.
DC Accuracies	DC Current or DC voltage ±0.5%.
Zero Adjustment	±100% of span. Front-panel screwdriver adjust.
Maximum Deadband	0.2% of span (sensitivity is 0.1% of span).
Ambient Temperature Limits	0°C to + 50°C (32°F to 122°F) for normal operation.
Feedback Potentiometer	Sealed and shielded conductive plastic design; 0.25% independent linearity.
Servo Balance Motor	DC permanent-magnet rotary type; permanently lubricated.
CHART DRIVE SYSTEM:	
Energy Source	DC stepper motor and pulse-generating circuitry synchronized with power line frequency.
Chart Feed Rates	2, 5, 10, 15, 30 and 60 cm/hr and cm/min.
Drive Controls	Six-position feed rate selector, CM/HR-CM/MIN switch and CHART OFF/ON switch provided on front panel.
Transport Features	Front loading, dual-ended sprocket drive, slide-out chart tray, thumbwheel advance, and chart tear-off bar.
POWER REQUIREMENTS:	
AC Line Source	115 or 230 Volts (±10%), rear switch selectable. 60 Hz or 50 Hz, selected at time of instrument order.
Approximate Consumption	Single-pen model 20 VA; three-pen model 30 VA. Attached line cord. Fuses supplied in accessory kit.
INSTRUMENT CASE:	
Style and Features	NEMA II bench type with carrying handle, foot rests, removable rear safety cover and self-storing Lexan front door. Three-pen model also has tilt bar and two carrying handles.
Overall Size	See dimensional diagram in Figure 2-1.
Approximate Weight	Single-pen model is 12 lbs (5.5 kg); Three-pen model is 23.5 lbs (10.7 kg)

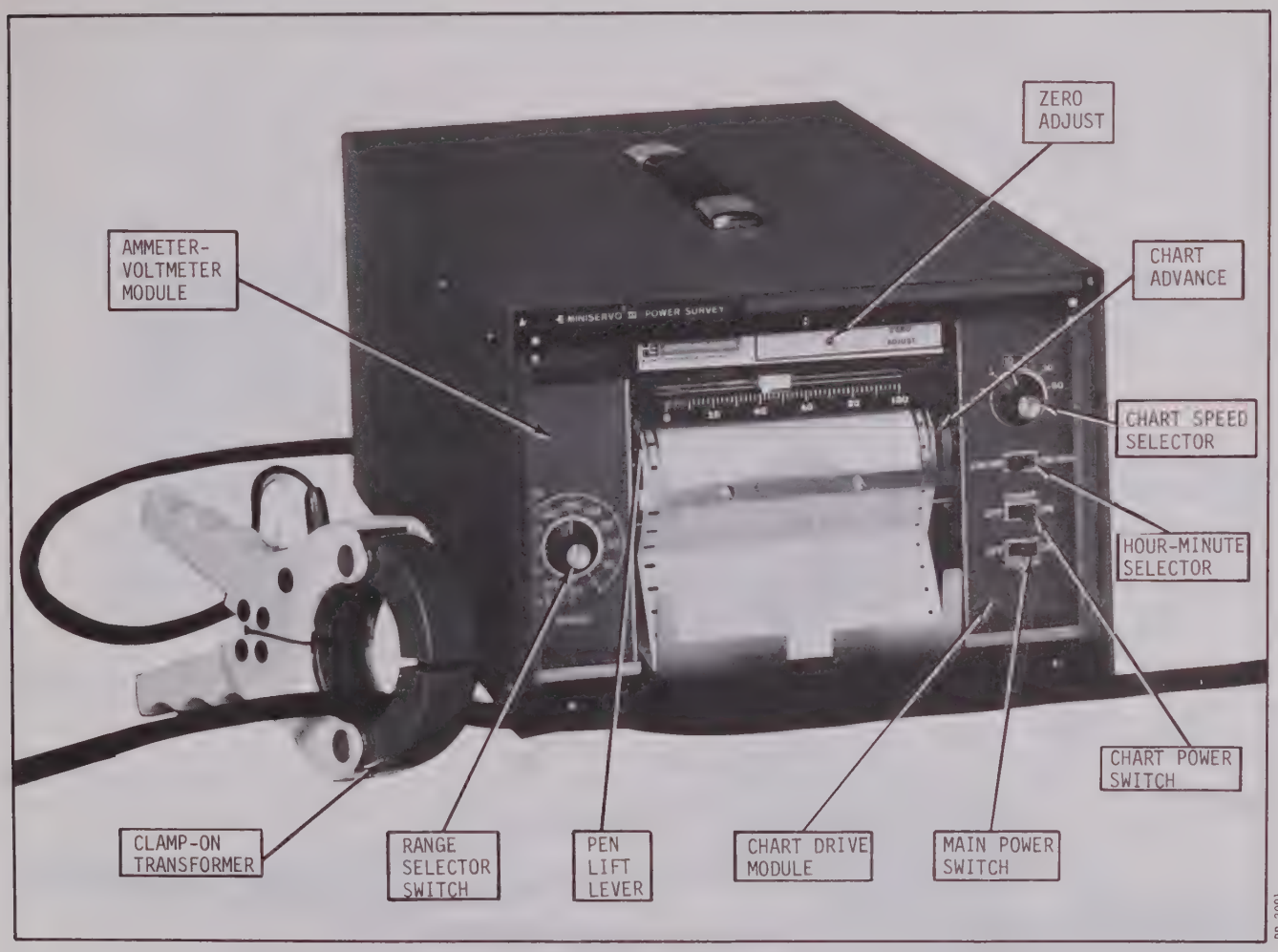

Figure 1-1. Single-Pen Power Recorder Model MS411B (Stock No. S-22907-1).

1.3 PRINCIPLES OF OPERATION

a. Circuit operation for the basic AC measuring system of the recorder is illustrated in the simplified block diagram of Figure 1-3. Each recording channel will include two major subassemblies -- the Ammeter-Voltmeter Module and the Servo Amplifier Module. The single-pen recorder has one complete system, as shown in the block diagram; while the multi-pen recorder has three separate but identical systems. Each instrument also includes an electronic Chart Drive Module and chart transport assembly.

b. External AC signals are applied to each Ammeter-Voltmeter Module through a voltage input terminal block and a current input transformer plug located on the rear panel of the recorder. The clamp-on current transformer(s) used with the recording system is rated as shown in Table 1-1. A potential input up to 600V AC can also be applied to the module through an internal isolation transformer.

c. The Ammeter-Voltmeter Module permits the operator to select the measurement of either AC current or voltage. Signal conditioning circuits employing a Gain Amplifier then establish a calibrated signal level that is proportionate to the full-scale value selected on the module RANGE Switch. The resulting AC signal is rectified, filtered, and then made available at a rear-panel terminal as a 0-1V DC analog signal.

d. As shown in the block diagram, a rear-panel jumper wire connects the output from the Ammeter-Voltmeter Module to the input of the Servo Amplifier Module. The Servo Amplifier is designed to operate on an automatic null-balance principle. In the basic servo loop, the input signal level is compared with an internal feedback voltage representing pen position. The difference or error signal thus developed is then amplified and used to drive the servo motor in a direction that causes the system to balance. The pen accurately records this movement over the calibrated chart span. A zero offset circuitry provides full-scale pen positioning, and a separate regulated power supply provides reference voltage for the feedback potentiometer.

e. By removing the rear-panel jumper from the output terminal of the Ammeter-Voltmeter Module, external

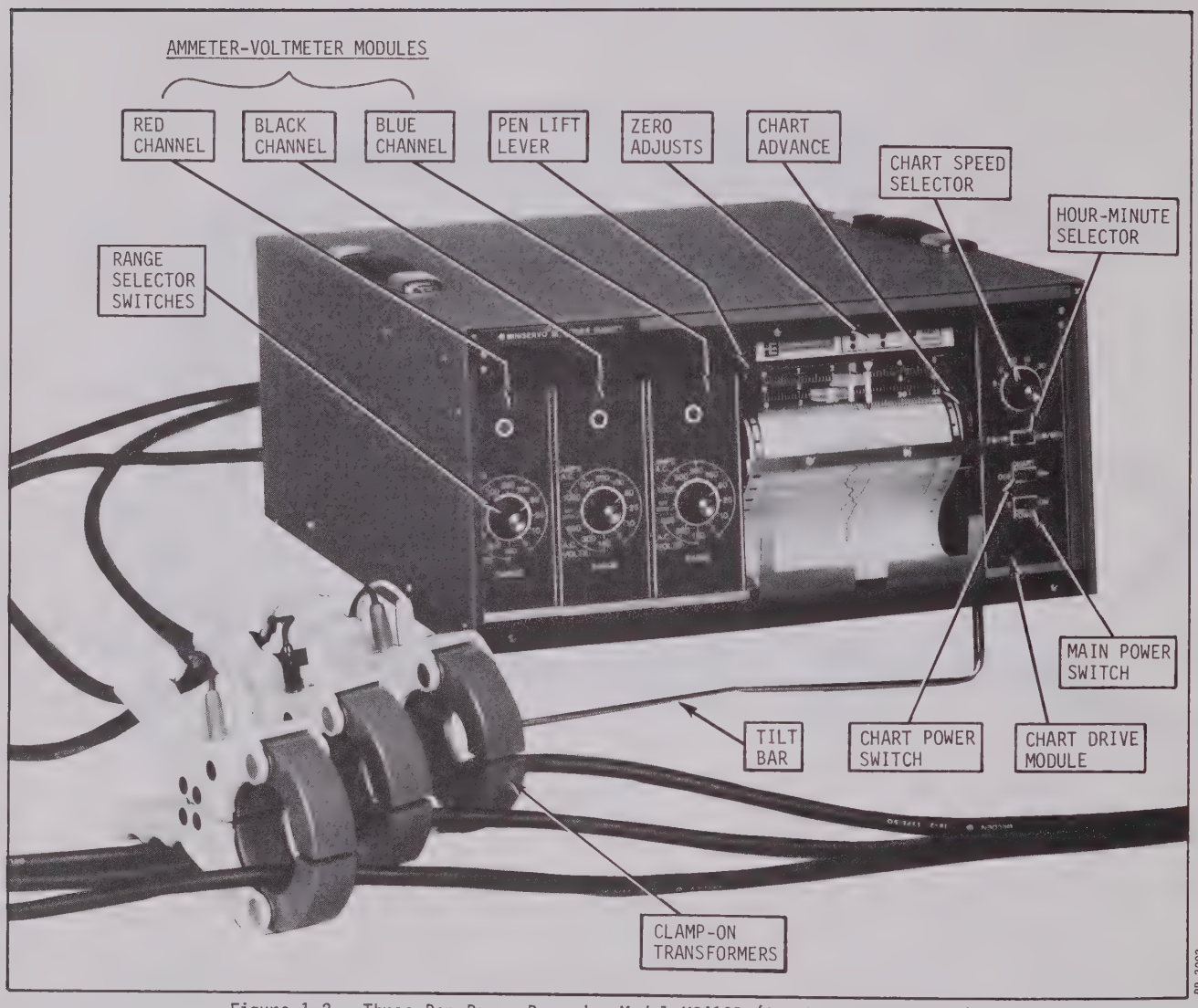

Figure 1-2. Three-Pen Power Recorder Model MS413B (Stock No. S-22906-1).

0-1V DC signals can be connected directly to the Servo Amplifier for recording on the chart. In addition, the jumper can be connected across the 1mA and 1V channel input terminals and external 0-1mA DC signals recorded. For a more detailed theory of operation, refer to separate Servicing Documentation manual.

2. INSTALLATION

2.1 UNPACKING INSTRUCTIONS

a. Examine packing case for damage prior to opening. If the packing case shows damage, make a notation to that effect on the express receipt or freight bill. If the shipment within is damaged, notify the carrier and your Esterline Angus representative immediately. The following standard items have been inspected and carefully packed in the Miniservo shipping carton.

ITEM	QUANTITY/MODEL MS411B	MS413B
Recording Instrument	1	1
Clamp-on Transformer	1	3
Current Input Cable	1	3
Voltage Input Cable	1	3
Ink Cartridge (6 Pack)	2	2 Ea. Ch.
Instruction Manual	1	1
Recording Chart (6 Pack)	2	2
Fuse Kit	1	1

b. Remove the packing material from the carton carefully and check off all items listed on the packing slip as they are unpacked. Inspect all contents for damage.

CAUTION: Do not attempt to operate a damaged instrument or clamp-on transformer.

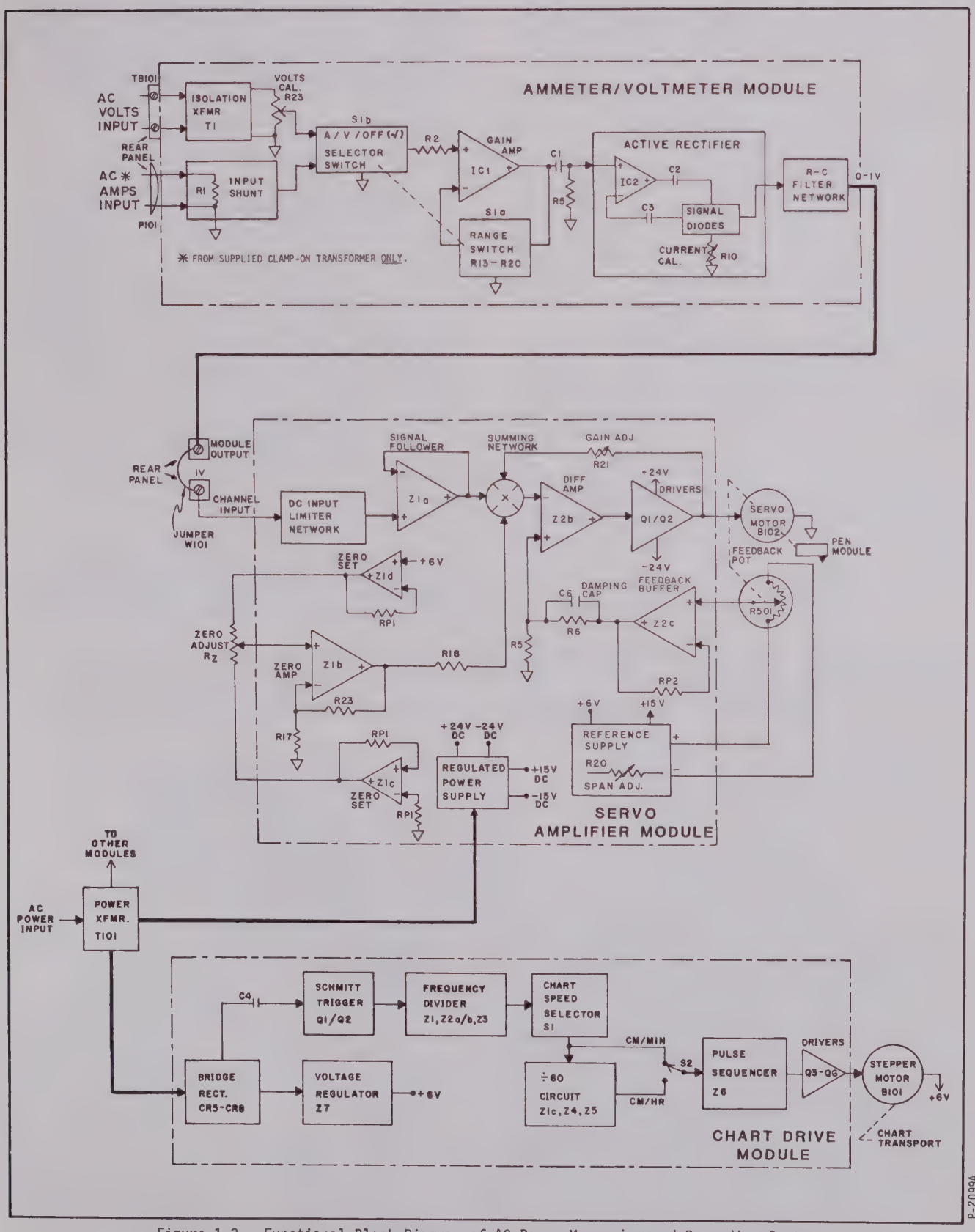

Figure 1-3. Functional Block Diagram of AC Power Measuring and Recording System.

c. Each instrument is carefully inspected and properly calibrated at the factory prior to shipping, and should be ready for operation as soon as it is unpacked and set up.

d. Setting up the instrument for operation basically consists of the following procedures:

(1) Note mounting considerations.

(2) Select operating power.

(3) Install chart paper.

(4) Install pen module(s).

(5) Connect analog input signals.

2.2 INSTRUMENT MOUNTING

a. This recording instrument has been designed primarily for portable and bench-top applications and, therefore, no special installation procedures are required. Case dimensions are shown in Figure 2.1.

b. Foot rests are attached to the bottom of the instrument to protect supporting surfaces. The three-pen model has a tilt bail located under the case to improve front-panel viewing. The single-pen unit may also be tilted backward a maximum of 20 degrees without hindering the automatic refolding of used chart.

c. Preferably, the recorder should be positioned in a clean well-lighted location that affords convenient access for the operator. It should not be subjected to excessive vibration or extreme temperature and/or humidity conditions. If excessive dust, moisture or corrosive fumes are present, a properly vented and filtered enclosure should be used to protect the instrument.

2.3 OPERATING POWER

CAUTION: Do not apply power to recorder until unit is set up for desired AC source operation.

a. Each recorder is equipped with a Power Mode switch and fuse kit to allow either 115V or 230V AC operation. Before placing the instrument into operation, check to ensure that the proper fuse has been installed and the Power Mode switch is set for proper line voltage. When a stock instrument leaves the factory it is normally set up for 115V operation.

NOTE: Chart drive must be operated at correct frequency. Refer to rear panel label for either 50 or 60Hz specification.

b. The Miniservo recorder may be set to operate on either 115 or 230V by the following steps:

(1) Gain access to rear panel by turning the retaining screw(s) located along the top of the rear panel cover three-quarters of a turn counterclockwise, then remove cover. Set Power Mode switch, located on the rear

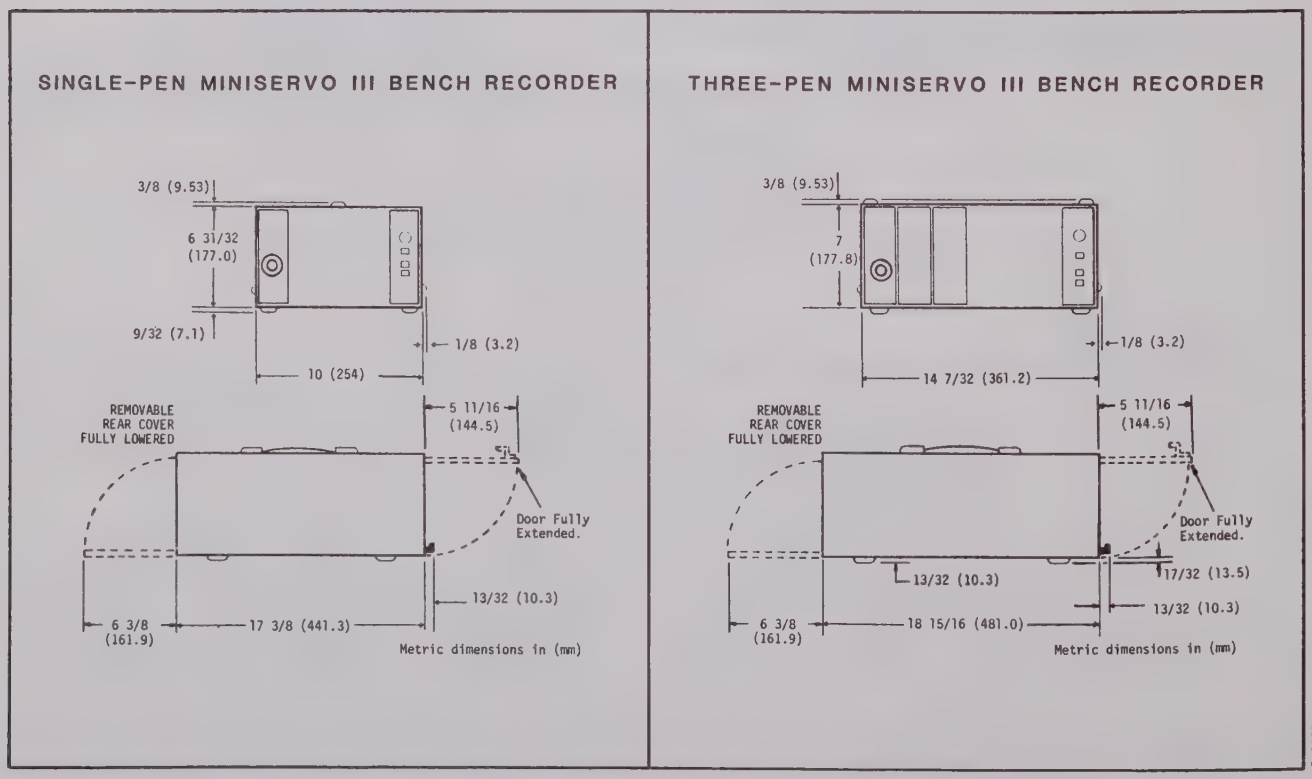

Figure 2-1. Dimensional Diagrams for Power Recorders with NEMA II Case Designs.

panel, to desired power line voltage (either 115V or 230V AC). Refer to Figure 2-4 or 2-5 for switch location.

(2) Remove fuse retainer cap from rear-panel holder by turning cap in direction of arrow.

NOTE: Spare fuses are provided; a 1/2 amp for 115V operation, and a 1/4 amp for 230V operation.

(3) Select proper fuse and place into fuse holder. Replace cap by turning in opposite direction of arrow. The recorder is now ready to receive AC power at the frequency (50 or 60Hz) specified.

2.4 CHART INSTALLATION

Only Esterline Angus precision charts should be used in this instrument for guaranteed accuracy and optimum performance. To ensure continuous records, inspect the recorder periodically for its remaining chart supply. Always keep enough charts on hand to operate the recorder for at least one month. Charts must be ordered by assigned numbers, which are printed along the right-hand margin of each chart.

2.4.1 CHARTING PROCEDURE

To install chart paper in the recorder, refer to the chart threading illustration in Figure 2-2 and proceed with the following steps:

(1) Open front door and slide into top of recorder case. Place main POWER switch in its OFF (left-hand) position. Grasp lower edge of scaleplate and swing plate outward and upward to remove it from top retaining clips.

(2) Raise pen holder(s) using Pen Lift lever. Grasp front of chart tray at bottom of recorder and slide tray fully outward until it stops.

(3) Remove Z-fold chart from its container. To help paper feed more freely, grasp chart pack and fan one end of sheets; then repeat at opposite end.

(4) Orient pack so that edge with elongated holes is on left-hand side and printed side of paper will face recorder as chart unfolds from top of pack. Bend pack at angle and insert it into rear supply compartment through opening on right side of tray.

(5) Lift out a few folds of chart from top of supply pack and insert leading edge of paper back between Mylar threading chute and drive roll.

(6) Rotate Chart Advance Thumbwheel downward and thread chart over top of drive roll. See that drive roll pins engage chart holes at both sides. Guide leading edge of chart behind folding wedge located in front of drive roll.

(7) Slide chart tray back into recorder. Continue to rotate thumbwheel until several paper folds enter front accumulator compartment of tray (Figure 2-2).

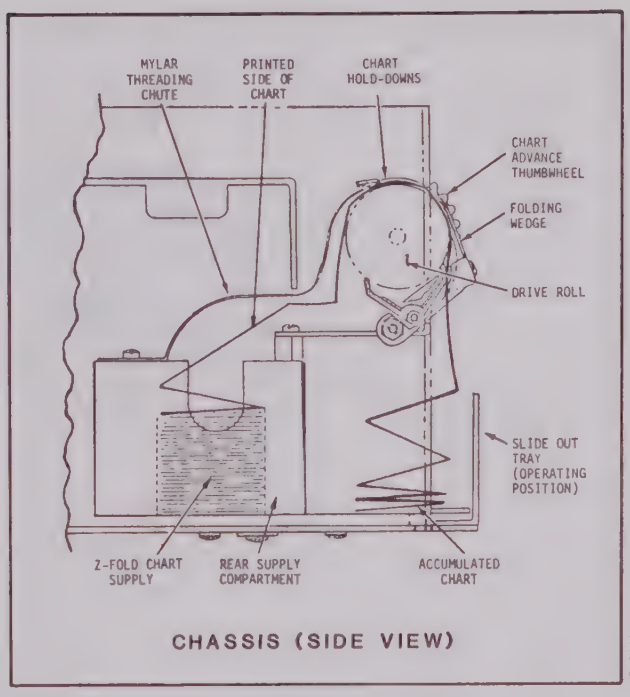

Figure 2-2. Chart Threading Diagram with Tray Closed.

NOTE: If chart does not start to fold properly, manually position first few folds into tray.

(8) Replace scaleplate by first inserting top edge into retaining clips; and then swing plate down until it snaps firmly into position. To check operation, turn on main POWER switch, select chart speed, and place CHART switch in its ON position.

NOTE: A 1/8" wide blue line that starts approximately one meter (39") from end of chart in left-hand margin, will indicate end of chart is near.

2.5 INK CARTRIDGE INSTALLATION

a. Disposable pen-and-ink cartridges are employed in the writing system of Miniservo III recorders. These plug-in modules are supplied as accessories in the instrument service kit. Single-pen recorders are supplied with red ink cartridges and a snap-on scale pointer; while the three-pen model uses cartridges of different ink colors and pen tip length for each recording channel. Standard ink colors are: Red for channel "A", black for channel "B", and blue for channel "C". Refer to Figure 2-3 for the correct operating position of each channel cartridge.

b. To ensure continuous records, check supply of ink cartridges when changing charts. Each cartridge holds enough ink for approximately 3600 feet of chart trace. Always keep a supply of cartridges on hand to operate the recorder for at least one month. Replacement cartridges are available in convenient six-packs.

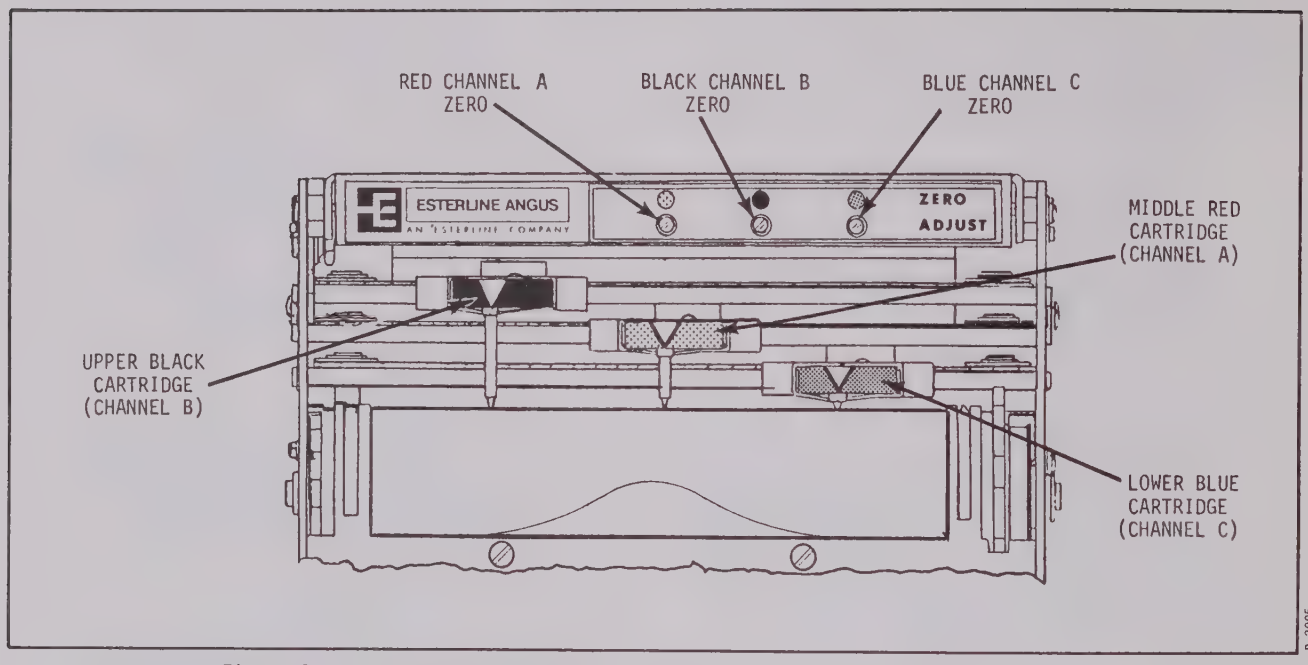

Figure 2-3. Ink Cartridge and Zero Adjust Locations for Three-Pen Recorder.

2.5.1 INKING PROCEDURE

To install an ink cartridge, proceed with the following steps:

(1) Remove ink cartridge from accessory package supplied. On single-pen units, slide scaleplate pointer onto cartridge pen staff until it snaps over top of cartridge.

(2) Grasp lower edge of scaleplate and swing plate outward and upward to remove from top retaining clips. Move Pen Lift lever to raise cartridge holder.

(3) Remove the protective cap from pen tip and, with pen tip facing down, insert module straight back into cartridge holder.

NOTE: On three-pen models (Fig. 2-3) install cartridges with shortest pen tips first. A piece of paper or blotter may be inserted under pen tips to avoid ink traces on chart.

(4) Move Pen Lift lever to lower pen or pens onto chart. Replace scaleplate by inserting top edge in first, then swing plate downward until it snaps into position. With chart installed, select a chart speed, turn on POWER and CHART switches, and check operation.

NOTE: Retain protective cap to replace on pen tip when recorder is to be inoperative for long periods.

2.6 POWER AND GROUND WIRING

a. Power to operate the bench-styled recorder is conducted through a permanently-attached line cord that extends approximately seven feet from the rear of the case. The cord is terminated in a 3-prong plug for connection to a properly earth-grounded, 3-wire AC receptacle.

WARNING: For safe operation, recorder MUST be properly connected to earth ground as directed in the following paragraph.

b. An individual ground connection point is provided on the rear panel of the recorder. To gain access to the panel, turn the retaining screw(s) located along the top of the rear panel cover three-quarters of a turn counterclockwise, then remove cover. This screw terminal is located on a green terminal block as shown in Figure 2-4 or 2-5. As a safety precaution, a #12 wire is to be used to connect this terminal to an external earth- or building-ground point.

2.7 SIGNAL CONNECTIONS

All input signal wiring to the recorder is made at a connection panel on the rear of the instrument case. To gain access to the panel, turn the retaining screw(s) located along the top of the rear panel cover three-quarters of a turn counterclockwise, then remove cover. Before attempting to make any signal connections, be sure that the recorder is properly grounded and refer to Figure 2-4 or 2-5 for specific wiring points. See paragraph 3.3 for details.

WARNING: To prevent shock hazard, secure rear cover before connecting current or potential input leads to AC sources.

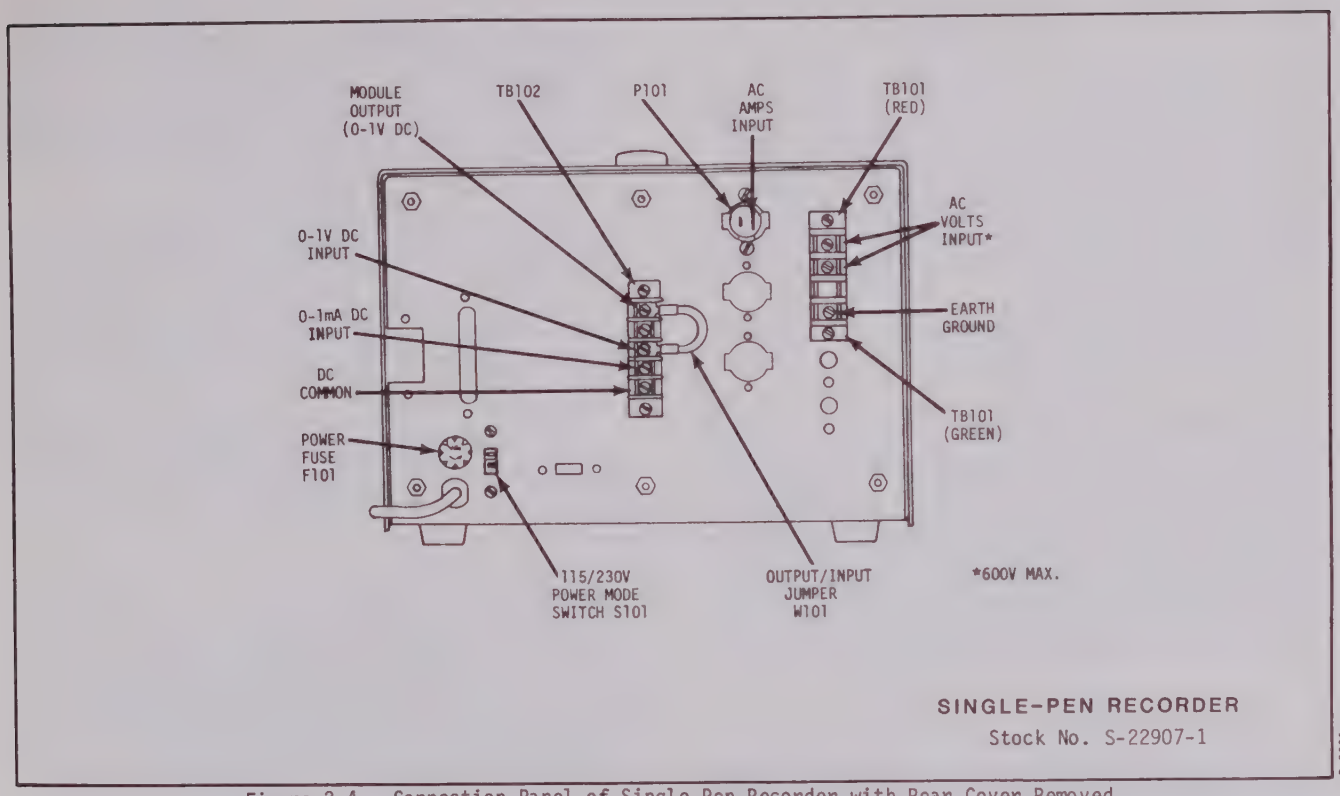

Figure 2-4. Connection Panel of Single-Pen Recorder with Rear Cover Removed.

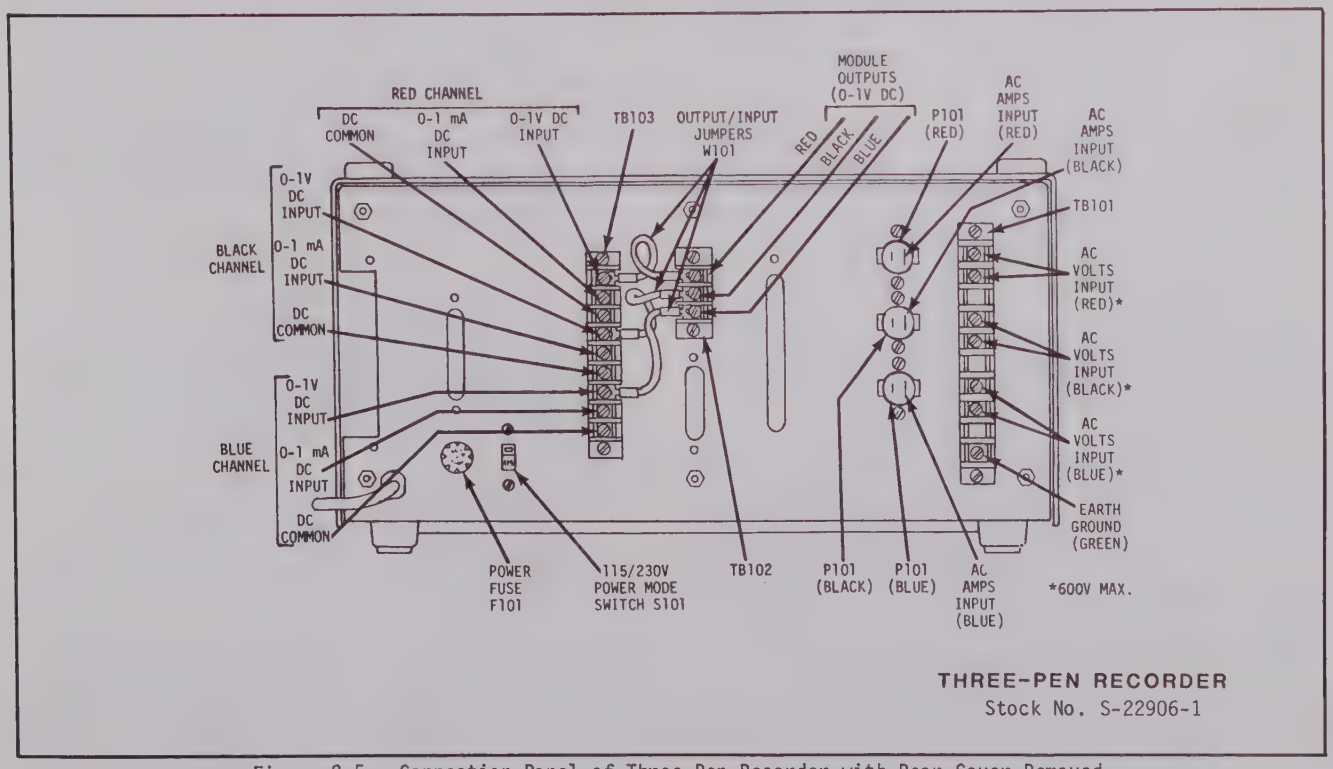

Figure 2-5. Connection Panel of Three-Pen Recorder with Rear Cover Removed.

3. OPERATION

3.1 GENERAL

This section of the manual includes operating instructions for the Miniservo Ammeter/Voltmeter recorders. No attempt should be made to operate an instrument until all installation and operating instructions have been thoroughly studied. Normal care when handling any precision piece of equipment should be exercised by the user.

NOTE: See Manual Appendix for optional attachments.

3.2 RECORDING CONTROLS

Described in this section are operating controls for the single- and three-pen Miniservos. Operation of models MS411B (Fig. 1-1), and MS413B (Fig. 1-2), are essentially the same unless otherwise stated. Both recorders include a multispeed Chart Drive Module; the single-pen unit has one multirange Ammeter/Voltmeter Module, while the three-pen unit has three Ammeter/Voltmeter Modules. Basic control functions of these modules are described in the following paragraphs:

3.2.1 FRONT PANEL CONTROLS

a. Pen Lift (Lever): The small metal arm located on the left end of the scaleplate is a pen lift lever. This device permits the operator to raise or lower the recording pen or pens as desired. To raise the pen(s) from the chart, move the lever arm upward (single-pen) or downward (3-pen). The pen(s) can be lowered to recording position by moving the lever downward (single-pen) or upward (3-pen).

b. Chart Advance (Thumbwheel): This mechanical adjustment is provided so that the operator can advance the chart paper manually. Rotating the wheel downward overrides the internal drive system and propels the chart forward. This control should always be used when charting the instrument.

c. POWER OFF/ON Switch: This is a two-position slide switch on the Chart Drive Module. It is used to control power to all electronic modules and the chart drive. To energize the recorder, move the switch to its ON position. Always place the switch in its OFF position when recorder is not in use, or when charting, inking or servicing the unit.

d. Chart Speed Selector Switch: This six-position rotary switch offers the operator a selection of six different centimeter feed rates for both minute and hour chart speeds. It may be rotated in either direction with power off or with the chart in motion.

e. CM/HR-CM/MIN Switch: A two-position slide-type switch that is used to select either hour speeds or minute speeds for any feed rate setting. The switch may be operated while the chart is in motion.

NOTE: When interpreting chart traces on 3-pen units, bear in mind that red pen records 5mm behind black pen, and blue pen records 5mm behind red pen.

f. CHART OFF/ON Switch: This two-position slide-type switch controls power to the chart drive PC board when the main POWER switch is ON. Place this switch in its ON position to start chart motion, and in its OFF position to stop chart. This switch may be used to conserve chart paper when a timed record is not required.

g. ZERO ADJUST: One screwdriver adjustment potentiometer is provided for each recording channel. Located directly above the scaleplate, the pot is used to zero the recording pen on the chart or to suppress or elevate electrical zero to a desired offset value. Refer to Figure 1-1 for location of zero adjust on one-pen model, and Figure 1-2 or Figure 2-3 for zero adjusts on three-pen models.

h. RANGE Switch: A twelve-position rotary switch located on the Ammeter/Voltmeter Module. It is used to select any one of 8 AC-current ranges or 3 AC voltage ranges. An "OFF" position is included for checking zero.

3.2.2 REAR PANEL CONTROLS

a. The location of each rear-panel feature is shown in Figure 2-4 or 2-5--depending upon the model supplied. In addition to the following switch, each connection panel includes a power line fuse, terminal blocks for AC voltage and optional DC inputs, as well as plug connector(s) for current transformer inputs.

b. Power Mode Switch: A two-position slide switch that permits the operator to select either 115V or 230V AC recorder operation.

CAUTION: Power source must match this switch setting. Also check recorder fuse rating.

c. Calibration Controls: All internal calibration controls for the recorder are precisely set at the factory. If recalibration is required, refer to Servicing Documentation.

3.3 OPERATING PROCEDURES

a. The following basic operational steps assume that initial installation procedures have been completed, chart paper is installed, and that the inking system for each recording channel is ready for use.

WARNING: Recorders connected to electrical circuits may be hazardous. Exercise appropriate caution when handling clamp-on transformer and when making connections to rear panel of recorder.

b. Before connecting signal leads to the recorder, disconnect the AC power cord and remove cover from rear connection panel. Refer to the connection panel illustration in Figure 2-4 or 2-5 for recorder wiring points. The earth ground terminal on the green terminal block must be connected directly to a valid building ground--such as a cold water pipe.

3.3.1 AC AMMETER/VOLTMETER

(1) Connect banana plugs of supplied cable to clamp-on current transformer(s) furnished with recorder. Ignore load polarity notation if supplied on transformer.

WARNING: Although current transformer has internal protection, a maximum open-circuit secondary potential of up to 10-15V AC may be present with unit attached to current-carrying conductor.

(2) Attach 2-pin polarized connector on other end of cable to current transformer input (plug P101) on rear panel of recorder. There are three plugs provided on 3-pen recorders--one each for Red, Black, and Blue color-coded input cables. DO NOT connect clamp-on transformer(s) to any source at this time.

NOTE: Both current and voltage inputs may be connected to recorder at the same time.

(3) Attach spade connectors of voltage cable supplied to the "AC volts input" screw terminals on TB101. There are three color-coded sets of terminals on 3-pen recorders--a pair each for the Red, Black, and Blue color-coded input cables. DO NOT connect other end of cable to any voltage source at this time.

NOTE: For each recording channel, see that jumper wire W101 is connected from MODULE OUTPUT terminal to CHANNEL INPUT terminal labeled "1V".

(4) Replace rear-panel cover, apply power to recorder, and permit instrument to warm up for approximately 10 minutes.

(5) With chart running, set front-panel RANGE selector switch to its OFF position, lower pen(s), and check for a zero pen indication on the chart. If necessary, adjust ZERO pot for correct pen position. Repeat zero calibration for each channel of a 3-pen recorder. Turn off chart drive and raise pen(s).

CAUTION: Recording system is to be used on indoor circuits only.

(6) To record AC current, set RANGE switch to the desired position (5-1000 amps AC). If AC source is unknown, preset to highest range and then reduce setting until suitable measurement is obtained. Refer to Table 1-1 for range multiplying factors that have to be applied to the recorder's RANGE switch setting according to transformer being used.

WARNING: Always follow recommended electrical safety procedures when connecting to high-voltage lines.

(7) Attach clamp-on transformer to current conductor being measured. See Table 1-1 for ratings of transformer being used.

CAUTION: Current input circuit of recorder [illegible]rounded.

(8) Clamp-on transformer jaws must be completely closed for accurate current recordings. If currents below 5A are to be measured, a reduced full-scale range can be achieved by looping conductor through transformer jaws. Full-scale range may then be divided by the number of times conductor passes through jaws. Loop should be large to minimize field effect of return line.

(9) To record AC voltage, set RANGE switch to the desired position (150-600V AC). Always set switch to highest range when voltage to be measured is unknown.

CAUTION: Maximum input is 600V AC.

(10) Attach insulated crocodile clips on supplied cable to AC voltage points of external source. If spade lug connections are desired, slide boot insulators upward on cable, loosen screws and remove clips.

WARNING: Follow recommended electrical safety procedures when connecting to high-voltage circuits.

(11) Select desired chart speed, place CHART switch in "ON" position, and lower pen(s) onto chart. AC parameter selected on RANGE switch will now be recorded.

NOTE: When interpreting chart traces on 3-pen recorder, bear in mind that red pen records 5mm behind black pen, and blue pen records 5mm behind red pen.

3.3.2 DC SIGNAL RECORDING

All models are equipped with rear panel connections to the servo amplifier of the recorder for 0-1V DC and 0-1mA DC inputs. This feature permits the use of various external transducers for recording other parameters such as watts, vars, frequency, temperature, or pressure. Direct channel input connections are made as follows:

(1) With power off and no AC input signal applied to recorder, remove cover from rear connection panel.

(2) Locate jumper wire W101 connected to terminals on rear panel. Refer to Figure 2-4 or 2-5 for wiring points.

NOTE: In this mode of operation, direct connections are made to the DC Servo Amplifier Module, and the AC Ammeter/Voltmeter Module is not used.

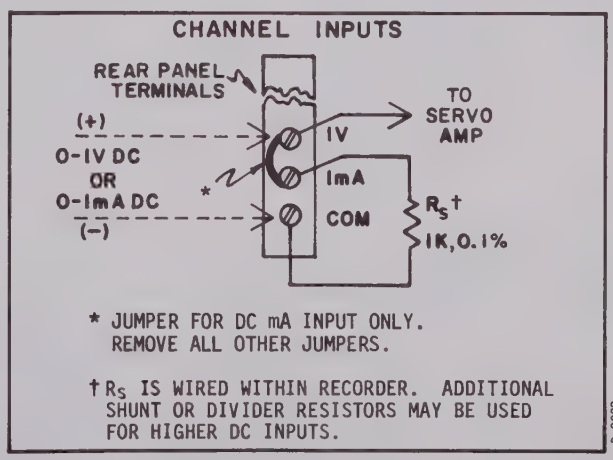

Figure 3-1. DC Analog Connections to Channel Inputs.

(3) To record 0-1V DC signals, completely remove jumper W101 from MODULE OUTPUT and CHANNEL INPUT terminals of recording channel. Connect external "+" DC source lead to CHANNEL INPUT terminal labeled "1V", and "-" source lead to terminal labeled "COM". Refer to connection diagram of Figure 3-1.

NOTE: To check zero, remove signal source and short input terminals. Adjust ZERO to position recording pen.

(4) To record 0-1mA DC signals, disconnect jumper W101 from MODULE OUTPUT terminal of recording channel and connect detached end to CHANNEL INPUT terminal labeled "1mA". Observing polarity, connect external DC circuit in series with CHANNEL INPUT terminals labeled "1V" and "COM" as shown in Figure 3-1.

NOTE: Higher input signals can be measured by connecting external resistance in series or parallel with Rs. Proper resistance must be selected to produce 1V DC signal across input terminals for full-scale recorder deflection.

4. MAINTENANCE

4.1 GENERAL

a. The Miniservo Ammeter/Voltmeter recorders are designed for a long, trouble-free life and should require little attention in the field. Periodic maintenance schedules should be established and followed, however, to ensure optimum performance. Where extreme temperature or contaminated atmospheres prevail, maintenance should be performed more often. Since frequency of use and environmental conditions will vary with applications, maintenance scheduling is left to the discretion of the user.

NOTE: Refer to Servicing Documentation manual for tests and calibration instructions.

b. Routine maintenance procedures will primarily consist of a complete visual inspection and cleaning. Keeping a simple record of component replacements will be a handy reference during inspection. Items such as chart paper and ink cartridges should be stocked in quantities needed to operate recorder for at least one month.

WARNING: Prior to servicing or cleaning activities, always remove AC power from recorder, and disconnect AC current and potential inputs from external sources.

4.2 INSPECTION

a. A complete visual inspection of the instrument should be made at each scheduled maintenance period to detect the possible onset of a malfunction. At this time, check for low chart and ink supplies, accumulation of dirt, damaged or loose hardware, and shorted or broken wiring.

b. See that all rear-panel connections are clean and tight, replace damaged transformers and worn input leads, and ensure that rear cover is in place during operation.

4.3 CLEANING

a. Regardless of the precautions taken, dirt and dust will enter the recorder chassis area, therefore, periodic cleaning of exposed components will be necessary. Always keep each pen tip free of lint and dried ink. Replace protective cap on each pen tip if recorder will remain inactive for more than 24 hours.

b. Light dirt marks can be removed from case and transformer surfaces, scaleplate, and front control panels with a damp cloth or sponge. Esterline Angus recording ink is water-based and can be removed with a wet cloth. Heavier dirt smudges can be removed with any commercially available liquid detergent; however, DO NOT use harsh solvents as they may damage certain finishes.

CAUTION: Exercise care when cleaning to avoid disturbing electrical wiring and alignment of mechanical parts.

4.4 LUBRICATION

All mechanical friction surfaces, motors, and other moving parts of the recorder are permanently lubricated at the factory; therefore, no further lubrication is required for maintenance purposes.

4.5 REPLACEMENT PARTS

a. Replacement parts and accessories for the Ammeter/Voltmeter recorders are listed in Tables 4-1 and 4-2. For a complete parts breakdown of the instrument, refer to Servicing Documentation covering these recorders.

b. Most parts and recording supplies are available through Esterline Angus Sales Offices. To ensure prompt delivery and receipt of parts, always mention instrument Model Number and Serial Number as well as part number and description of all items desired.

Table 4-1. Replacement Parts List.

ITEM REFERENCE	PART NUMBER	DESCRIPTION	QUANTITY	
			MS411B	MS413B
	804C500-2	Cover Assembly, Recorder Door and	1	-
	804C500-1	Cover Assembly, Recorder Door and	-	1
	804C503-2	.Door Assembly	1	-
	804B603-2	..Glass, Door (Lexan)	1	-
	804C503-1	.Door Assembly	-	1
	804B603-1	..Glass, Door (Lexan)	-	1
	723A64	.Handle, Carrying	1	2

(Continued)

Table 4-1. Replacement Parts List (continued).

ITEM REFERENCE	PART NUMBER	DESCRIPTION	QUANTITY MS411B	QUANTITY MS413B
	752C107-1	Chart Drive Module (Complete)	1	1
PCB1	752C310-6	.PC Board, Stepper Drive (Complete)	1	1
S1	752B525¶	.Switch Assembly, Rotary (Complete)	1	1
S2	51166	..Switch, Slide (CM/HR-CM/MIN)	1	1
-	723A63	.Knob, Rotary Switch	1	1
S3, S4	51166	.Switch, OFF-ON Slide (POWER; CHART)	2	2
	804D101	Ammeter/Voltmeter Module (Complete)	1	3
PCB1	804C301-6	.PC Board Assembly (Complete)	1	*
T1	804B406	.Transformer, Current (Volts Input)	1	*
TB1	804C400-4	.Terminal Block (600V)	1	*
	723A63	.Knob, Range Switch	1	*
T301	See Table 1-1	Transformer, Clamp-On Current	1	3
PCB101	752C306-8	PC Board Assembly, Servo Amplifier (Complete)	1	3
T101	752B536-2	Transformer, Power	1	-
T101	752C539	Transformer, Power	-	1
	804B518▽	Cover Assembly, Rear Panel (Less Label)	1	-
	804B519●	Cover Assembly, Rear Panel (Less Label)	-	1
	804A630	Label, Cover (Danger)	1	1
W101	804A513	Jumper Assembly, Wire	1	3
	8935-G	Cord, Power (7' with Plug)	1	1
	14358	Holder, Fuse	1	1
Rs	16800403-201	Resistor, 1K ±.1%, 1/10W (Rear Panel)	1	3
S101	57534	Switch, Slide (115/230V Power Mode)	1	1
P101	KMC-55	Connector, Plug (AC Amps Input)	1	3
TB101	804C400-1	Terminal Block, Volts Input (600V AC)	1	-
TB102	804A403	Terminal Block, Output/Input	1	-
TB101	804C400-2	Terminal Block, Volts Input (600V AC)	-	1
TB102	804C401-1	Terminal Block, Module Outputs	-	1
TB103	804C401-2	Terminal Block, Channel Inputs	-	1
Rz	804C300-7	Zero Adjust Assembly (with Cable)	1	-
Rz	804C300-6	Zero Adjust Assembly (with Cable)	-	1
B101	752B109	Motor, Chart Drive	1	1
	723A2	Pulley, Chart Drive Motor (For 60Hz Operation)	1 A/R	1 A/R
	723A3	Pulley, Chart Drive Motor (For 50Hz Operation)	1 A/R	1 A/R
	70A199-3	Belt, Motor Timing	1	1
B102	723A118-3	Motor Assembly, Servo	1	-
B102	723A118-2	Motor Assembly, Servo	-	3
	723A54	Foot, Rubber	4	-
	190169-5	Bail (Bar), Tilt (12")	-	1
	190169-1	Foot, Front-Left	-	1
	190169-2	Foot, Front-Right	-	1
	45024	Foot, Bottom Rear	-	2
	723A55-6	Scaleplate, Stock (0-100)	1	-
	804A632	Scaleplate, Stock (0-5, 10, 25)	-	1
	804D900-1,-2,-3	Case, Carrying (Option) with extra pads	1 A/R	-
	804D900-1	Case, Carrying (Option)	-	1 A/R
	M804D10/11S	Manual, Servicing Documentation (Option)	1 A/R	1 A/R

*-Requires one per A/V Module. ¶-Includes wiring, connector and slide switch S2. A/R-as required.
▽-Hinge type. For screw-type mounting order Cover #804B634 (Screw #804A639).
●-Hinge type. For screw-type mounting order Cover #804B616 (Screw #804A639).

Table 4-2. Accessory Kit Itemization.

ITEM NUMBER	PART NUMBER	DESCRIPTION	QUANTITY MS411B	QUANTITY MS413B
	804A902	Accessory Kit (Includes Items 1, 4, 7, 11-14, and 16)	1	-
	804A902-1	Accessory Kit (Includes Items 1, 4, 7, 11-16)	1	-
	804A903	Accessory Kit (Includes Items 1-6, 8-14, and 16)	-	1
	804A903-1	Accessory Kit (Includes Items 1-6, 8-16)	-	1
1	804C511-1	.Cable, Transformer (Coded Red)	1	1
2	804C511-2	.Cable, Transformer (Coded Black)	-	1
3	804C511-3	.Cable, Transformer (Coded Blue)	-	1
4	804C508-1	.Cable, Voltage Input (Coded Red)	1	1
5	804C508-2	.Cable, Voltage Input (Coded Black)	-	1
6	804C508-3	.Cable, Voltage Input (Coded Blue)	-	1
7	723A26-6	.Pen Kit, Red Cartridge (6-Pack)	2	-
8	752A900-2-6	.Pen Kit, Red Cartridge (6-Pack)	-	2
9	752A900-3-6	.Pen Kit, Black Cartridge (6-Pack)	-	2
10	752A900-1-6	.Pen Kit, Blue Cartridge (6-Pack)	-	2
11	752A538	.Fuse Kit	1	1
12	FAG2-.5	..Fuse, Power (1/2A for 115V Operation)	1	1
13	FAG2-.25	..Fuse, Power (1/4A for 230V Operation)	1	1
14	59322-T100	.Chart, Stock Z-Fold (6-Pack)	2	2
15	752A907	.Ink Cartridge, Event Pen Option; 6-Pack	1	1
16	M804D10/11	.Manual, Operating Instructions	1	1

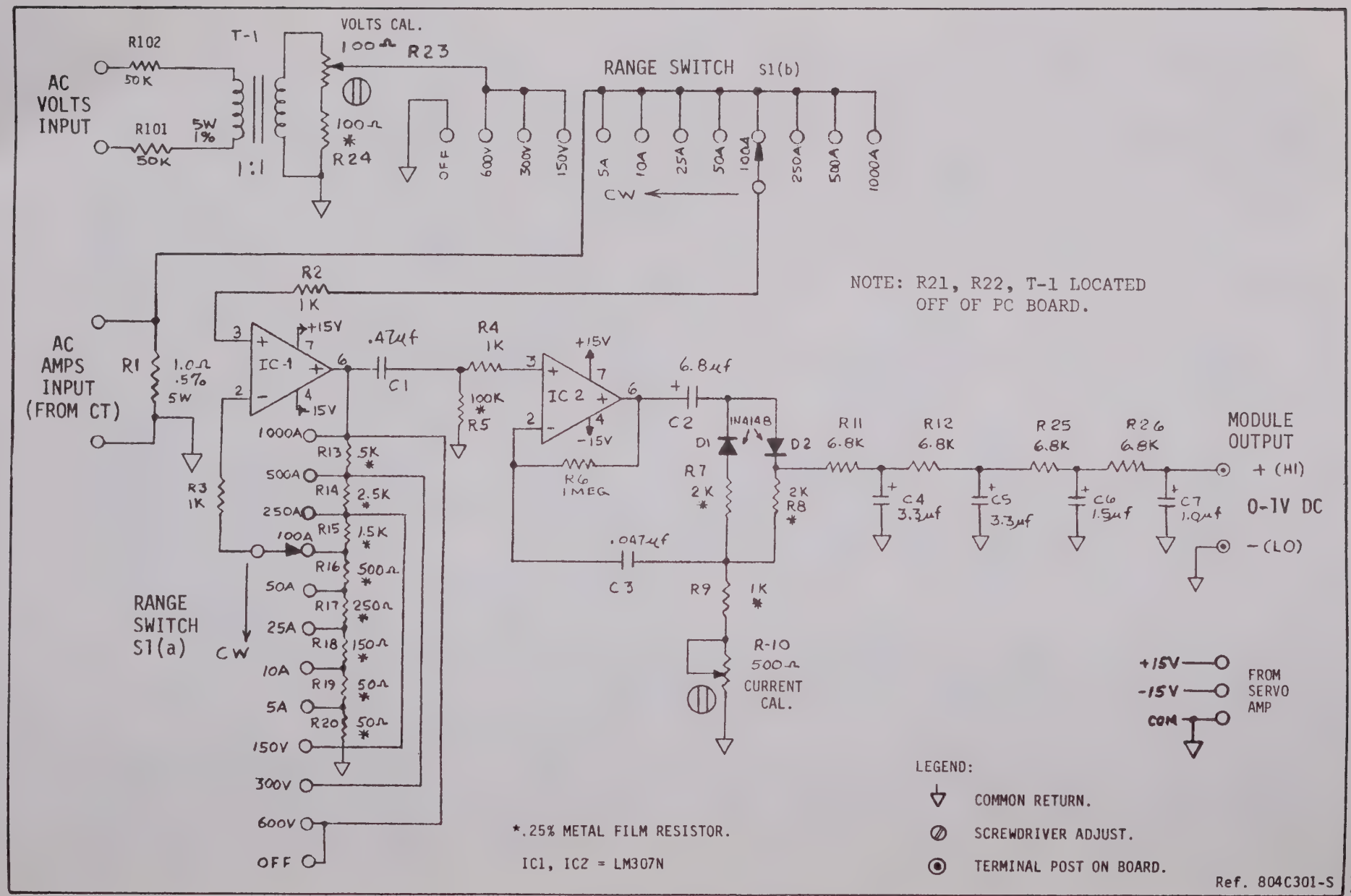

Figure 4-1. Ammeter-Voltmeter Module Schematic.

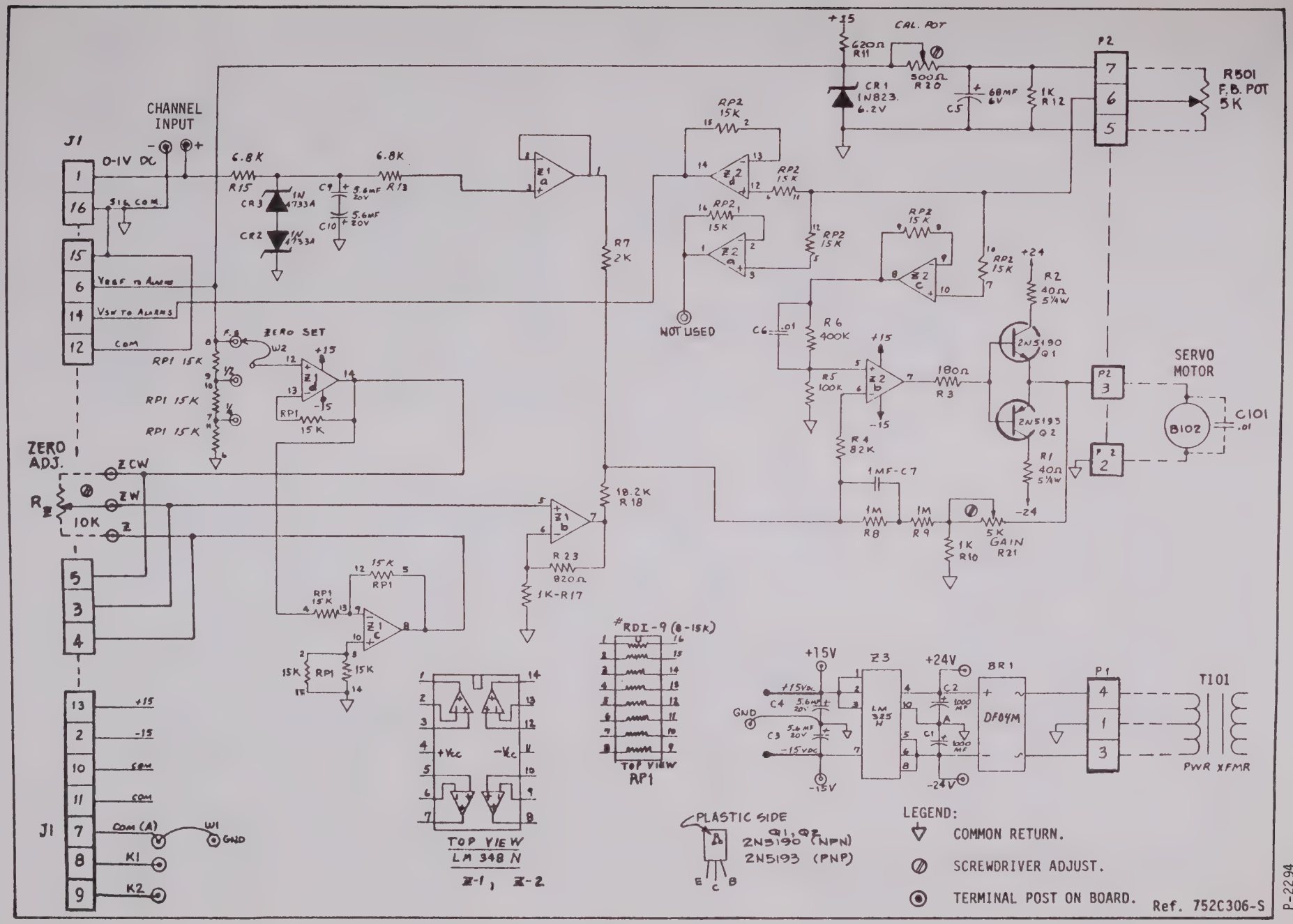

Figure 4-2. Servo Amplifier Module Schematic.

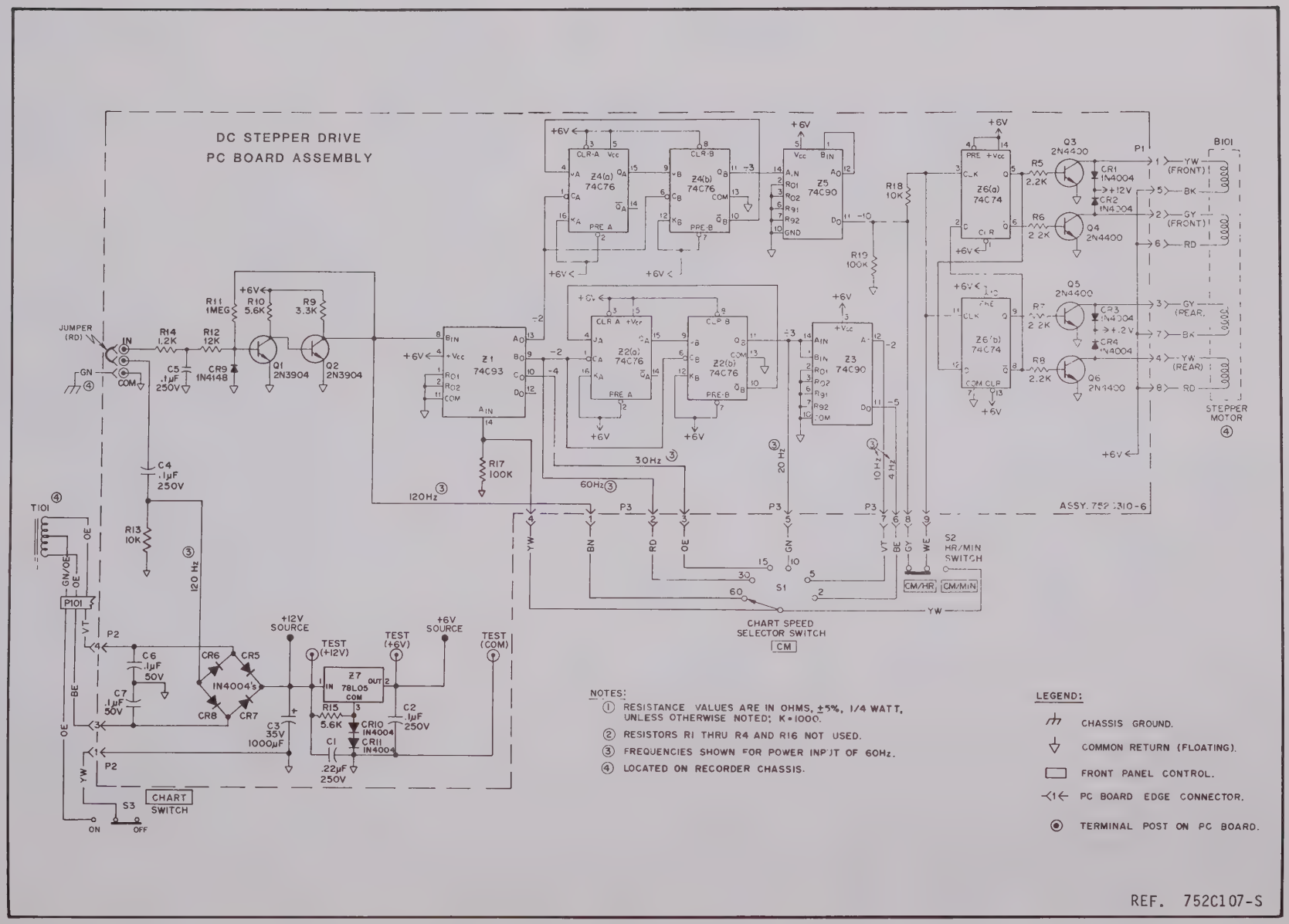

Figure 4-3. Multi-Speed Chart Drive Module Schematic.

A1. ALARM ATTACHMENTS

A1.1 DESCRIPTION

a. Each alarm option available for Miniservo® III Ammeter/Voltmeter Recorders provides the means of detecting one high or one low alarm. This alarm condition occurs whenever the pen of a recording channel having the alarm option passes through the alarm setpoint in the desired direction. An alarm condition results in a DPDT relay actuating one set of rear-panel output terminals (NO, NC, and COM) per recorder channel so equipped. Three-channel recorders may have up to three relays and three sets of output terminals. See Figure A1-2 for terminal location.

b. One light-emitting diode (LED) indicator and one setpoint adjustment (Figure A1-1) are provided for each recording channel having the alarm option, and are located at the top of the Ammeter-Voltmeter module. In the three-pen model, the exact location of this indicator and adjustment depends on the number of recording channels to be alarm-equipped.

c. The LED indicator comes on and the output terminals are actuated when the proper recording pen passes through the alarm setpoint for that channel, in the desired direction. For example, if a high alarm is set at 80% of chart span for the red pen, an alarm condition will exist if the pen moves from 70% of chart span to 85%. If the pen moves back to 70% of chart span, an alarm condition no longer exists. If, on the other hand, a low alarm is set for 40% of chart span, an alarm condition exists if the pen drops below this point.

d. The alarm setpoint adjustment, also shown in Figure A1-1, allows placing the setpoint anywhere along the active chart span. A colored dot to the right of this adjustment indicates for which recording pen the setpoint adjustment is being made. A separate Alarm Relay Board (mounted internally) contains a relay and set of output terminals for each recording channel having the alarm option. Each set of three terminals consists of one normally closed (NC), one normally open (NO), and one common (COM) terminal. These are connected to the corresponding relay contacts, and are used to control the "on" or "off" condition of external alarm circuitry.

NOTE: For optional 3-pen alarm wiring configurations, refer to separate Servicing Documentation.

A1.2 ALARM SETPOINT ADJUSTMENT

The alarm setpoint for each recording channel so equipped can be adjusted without the use of external voltage or current sources. Use the following procedure for adjusting setpoint:

(1) Place instrument main POWER switch in OFF position. On 3-pen model, observe top of recorder modules to determine which recording channels are equipped with the alarm option.

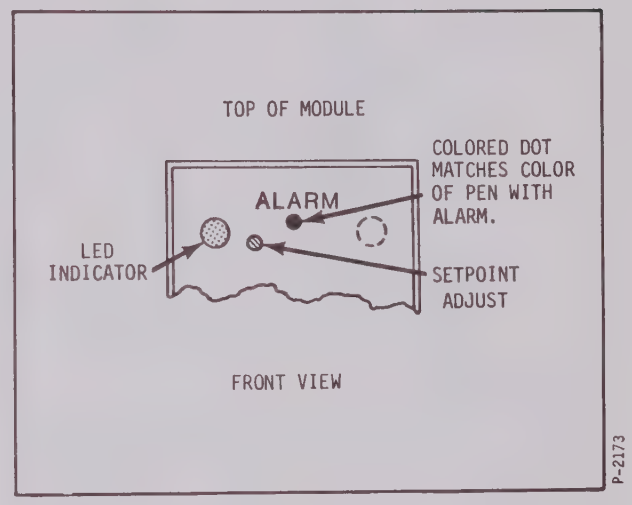

Figure A1-1. Location of Indicator and Adjustment.

(2) To expose rear panel, turn the retaining screw(s) located along top of rear panel cover three-quarters of a turn counterclockwise, then remove cover.

☛ WARNING: Hazardous potentials may be present on rear-panel terminal block labeled VOLTAGE INPUTS when external AC source connections are made.

(3) Place instrument main POWER Switch in ON position and RANGE Selector Switch on module to OFF/ZERO ✓ position. Locate ZERO ADJUST screw, (above scale-plate) with colored dot corresponding to color of recording pen to be adjusted. Turn ZERO ADJUST to place pen at desired alarm setpoint location on chart.

(4) Turn matching color-coded setpoint adjustment until LED indicator just comes on. Readjust ZERO ADJUST screw to place pen back to original location. Repeat for other pens, if supplied and equipped with alarm option.

(5) After adjustments are complete, connect external alarm circuits to Alarm Relay Board output terminals. See following paragraph for connection details.

A1.3 ALARM OUTPUT CONNECTIONS

a. External alarm circuits to be actuated by an alarm condition on a particular recording channel are connected to the appropriate terminals of the terminal block labeled ALARM OUTPUTS. This terminal block, shown in Figure A1-2, is located on the recorder rear panel. Each recording channel having the alarm option has one set of three output terminals labeled NO-normally open, NC-normally closed, and COM-common. The terminals are also labeled with the recording channel pen color. Relay contacts on Alarm Relay Board are rated 2A @ 115V AC.

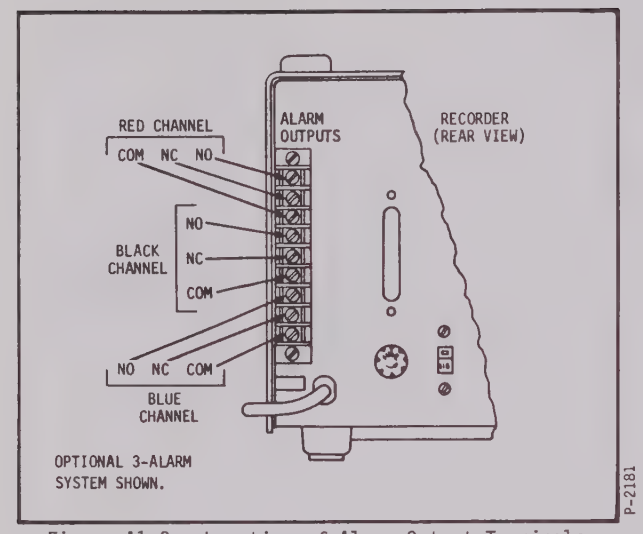

Figure A1-2. Location of Alarm Output Terminals.

b. In order to make external alarm circuit connections, gain access to rear panel by turning the retaining screw(s) located along the top of rear panel cover three-quarters of a turn counterclockwise, then remove cover. If a high alarm is desired, connect external circuit to the NO and COM terminals. Connect to the NC and COM terminals for low alarm actuation. Use AWG No. 22 or larger wire for connection to ALARM OUTPUTS terminal block. After external connections have been made, secure rear panel cover.

NOTE: For internal wiring diagrams and replacement parts, refer to separate Servicing Documentation manuals.

A2. EVENT PEN ATTACHMENTS

A2.1 DESCRIPTION

a. All Miniservo III Ammeter-Voltmeter Recorders can be equipped with an Event Pen attachment. This option is designed to record event information by graphically indicating the time of occurrence and duration of external "on-off" signals. The system features a separate inking pen that records in the right-hand margin of the chart paper. The event pen is time-aligned on the chart with the red analog pen, but all analog electrical circuits are completely isolated from the event pen circuit. External connections are provided on the rear panel of the recorder, as shown in Figure A2-1.

b. Disposable, self-contained, ink cartridges are used in the Event Pen option. The pen is actuated by a small plunger-type solenoid. When voltage is applied to the solenoid circuit, the pen is displaced .04" to the right on the chart paper. The pen will return to its normal "off" position when actuating voltage is interrupted. There are several methods available to drive the solenoid. If a switch-type option is selected, only an external dry contact closure is required. If one of the AC or DC voltage-type inputs is chosen, a solenoid circuit appropriate to the specified voltage is installed in the recorder. The user must specify and supply the input voltage, as well as the external event switching mechanism. Refer to instrument Data Sheet for type or input rating supplied.

A2.2 OPERATING PROCEDURE

The event pen option is made functional by wiring external switching circuitry to the recorder, installing ink cartridge, and energizing the system. Proceed with the following steps:

(1) Unpack items from accessory kit, make sure that all shipping materials have been removed from recorder, and remove instrument power.

(2) Connect external event circuit to rear terminals of recorder as shown in Figure A2-1. See Data Sheet for type and rating. System should operate within 10% of rated voltage. Observe polarities when connecting DC sources.

CAUTION: No voltage should be present in external circuits for the switch-type option.

(3) Do not energize event switching at this time. Gain access to event cartridge holder by grasping front scaleplate and swing upward to remove.

Table A2-1. Event Pen Specifications.

EVENT SYSTEM	Provides continuous ON- OFF records of external event signals.
INPUT ACTUATION (Optional):	
AC Ratings	120 or 240 volts rms (±10%).
DC Ratings	6, 12 or 24 volts (±10%).
Switch Type	Dry contact closure. Internal voltage source supplied.
SIGNAL RESPONSE:	
Pulse Width (ON or OFF)	125 msec. minimum for full deflection.
Repetition Rate	4 Hz maximum @ 50% duty cycle.
RECORDING METHOD	Disposable ink cartridge with nylon pen tip. Trace length approx. 365 meters.
PEN ACTUATION	Push-type, continuous-duty, solenoids. Approx. 3 watts.
PEN DISPLACEMENT	1mm (.04") minimum @ rated input.
INPUT CONNECTIONS	Two terminals provided at rear of recorder. Voltage divider supplied for 240V AC operation.

(4) If an analog pen is not at left end of scale, place finger near rear of analog cartridge holder and move assembly to left end. Position Pen Lift lever so that pen is down on chart.

(5) Select event pen cartridge from accessories and remove small rubber plug from air vent hole in left side of cartridge body. Also remove small rubber cap from tip of pen tube. Retain cap for future use and discard plug.

(6) Holding tube of event pen between thumb and forefinger of right hand with pen tip down, brace holder bracket with fingers of left hand and slide cartridge mount slot over lower bracket arm. Push cartridge all the way back into holder. A side view of the installed cartridge is illustrated in Figure A2-2.

(7) Actuate Pen Lift lever. Both analog and event pens should raise and lower together.

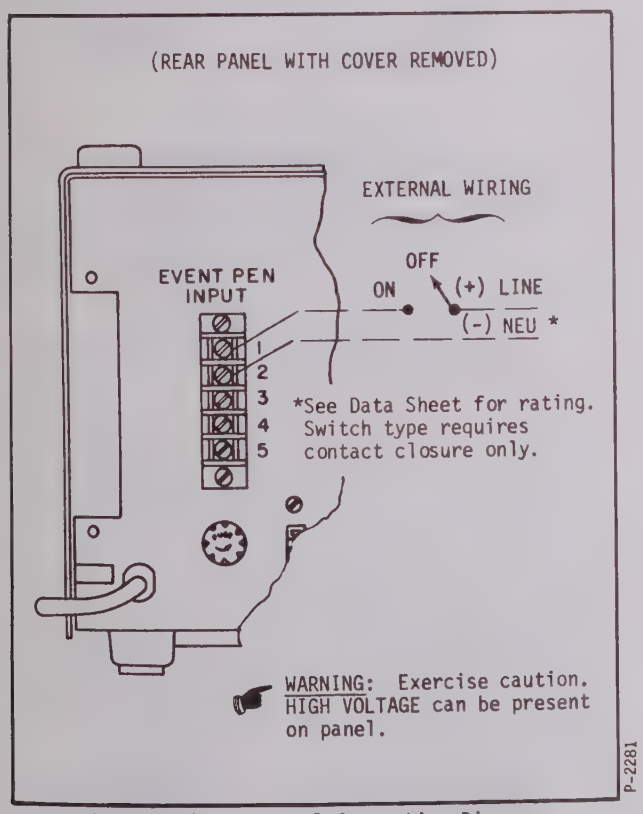

Figure A2-1. External Connection Diagram.

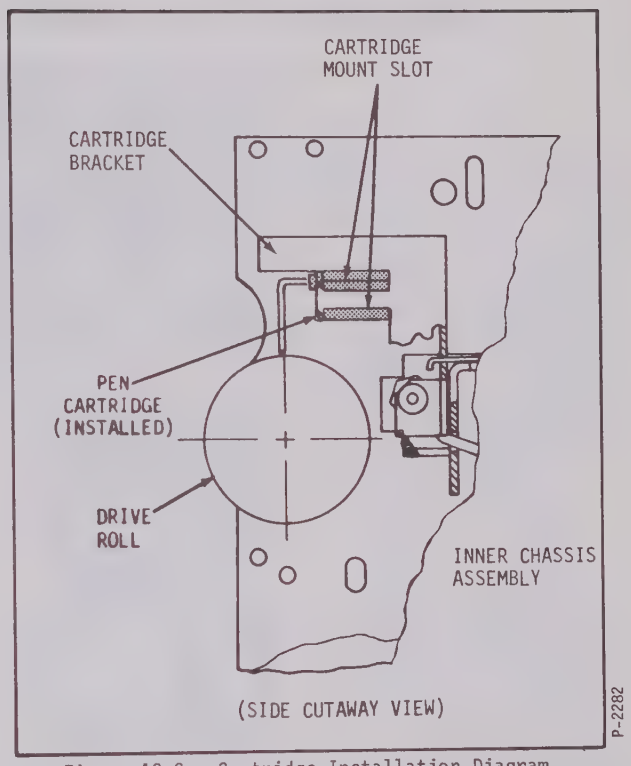

Figure A2-2. Cartridge Installation Diagram.

(8) Event pen cartridge is now properly installed. Replace scaleplate by inserting top edge in first; then, swing plate downward until it snaps into position. Restore power to recorder and check event operation by actuating external switching mechanism.

A2.3 MAINTENANCE

a. A new ink cartridge should be installed whenever needed, and the pen point kept free of lint, dirt, and dried ink at all times. Whenever the event pen (or the instrument as a whole) is to be shut down, the pen cap should be replaced on the point to prevent the ink from drying.

b. To ensure continuous records, install new ink cartridge when trace starts to lighten or after 10-to-15 charts are used. Replacement cartridges are available under EA Part Number 752A907. Refer to Servicing Documentation manuals for other replacement parts or for wiring diagrams and adjustments.

OTHER ESTERLINE ANGUS INSTRU

Esterline Angus has been a leading manufacturer of precision instruments since 1902! Today, we manufacture a complete line of power measurement and industrial process measurement, analysis and recording instruments. You can find Esterline Angus instruments at work in an array of applications: from utilities to aerospace facilities, from energy management to scientific research, in factories, in space exploration, and as components in finished products. For the complete story, request catalog A1000!

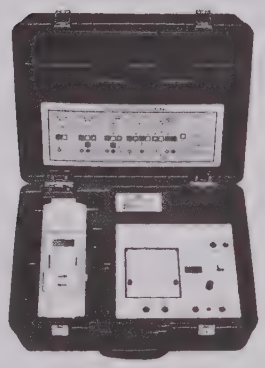

POWER MASTER III-A (left). This hand-held digital multimeter provides total AC power test capability. Measure amps, volts, kW, kvar, kVA and power factor on single or three phase, balanced or unbalanced circuits up to 600V AC, 1000A, 1800kW at 50/60 or 400Hz. Firing angle measurements for SCR analysis and phase angle readings are also provided. All measured parameters are easily read on a large liquid crystal display. Functions are switch selectable, and all readings may be held for system evaluation. A selection of other optional CTs are available to fit your unique needs. Standard unit is battery operated. An optional AC power adaptor is available.

POWER MASTER III-B (center). Offers all the capabilities of the PM III-A and more! Measure amps, volts, kW, kvar, kVA, power factor, phase angle and firing angle. Plus, kWh, kvarh and average power factor for sub-metering. Provides inrush current —a feature important for motor load analysis. A peak /valley feature offers continuous monitoring of all maximum and minimum values. Hand-held digital multimeter has output capabilities to the PRM (a part of the PMT system—see PMT) printer to give you a permanent record of all measurements. Battery operated or optional AC power adaptor available. **For additional information on the PM III-A and PM III-B, request catalog F680A!**

PMT - AC MOTOR/LOAD SURVEYOR (right). A complete system for AC motor analysis housed in a convenient carrying case! Provides measurement display and a printed record of all critical electrical power parameters. Inrush current, currents and voltages to analyze power system balance; kWh and demand to monitor power usage at the mains, feeders or individual loads; kW, kVA, kvar and power factor to optimize loads. Printouts are programmable with a choice of Instantaneous, Peak/Valley, Unit-Hour or Demand Summary Reports. Use the PMT to determine motor efficiency, determine if loads are balanced, and target areas for the greatest energy savings! 120/240V AC or AC with 12V DC. RS232 interface and external floppy disk storage capability available. **Request catalog F685 for complete details on the PMT!**

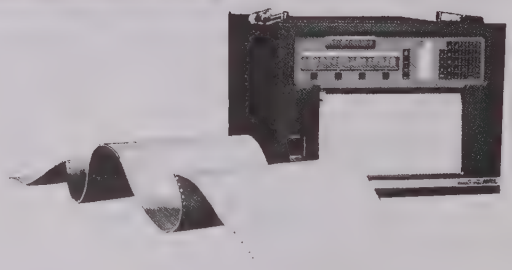

MRL MULTIPOINT RECORDER/LOGGER. Offers unprecedented flexibility and performance, from a minimum of 8 channels up to 48 channels within one instrument! Choose analog trend recording, tabulated alphanumeric data logging, or a combination of both. Provides useful, understandable reports for any application. Accepts mA, mV, VDC, thermocouple, resistance, RTD and thermistor inputs.

All operational parameters selected by the user and programmed quickly and easily. User defines mode of operation, channel type, measurement range and scale values, engineering units, scan interval, chart speed, peak/valley reporting, log report printout time, alarm setpoints and alarm operation method. Two threshold levels and positive or negative rate-of-change setpoints can be set for each channel in standard or failsafe operating mode. Programming is simple, guided by plain-language prompts and a menu-driven configuration routine.

Additional features and capabilities include: Math package, additional 48 channel 80 alarm relay expander box, RS232 communication interface, calculation of lethality factor, external device control and event message and counter report . . . **For the whole story on the MRL, request catalog F750!**

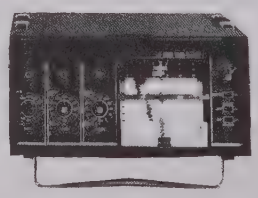

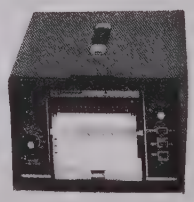

POWER SURVEY DEMAND RECORDERS (PSDRs)
Rising electrical costs and energy conservation programs have made energy audits a necessity in industrial and commercial facilities. PSDRs deliver the in-depth information necessary to conduct a complete electrical energy audit—comprehensive analog recordings of: single and three channel amps, volts, kW, power factor, kVA, kvar, kWh and demand. All PSDRs are equipped to accept 1mA or 1V DC input for recording other measurement parameters from a wide variety of transducers. A selection of models are offered to suit your needs and budget. **For the unabridged story, request catalog F661!**

MENTS AS NATIONALLY ADVERTISED

DIRECT WRITING RECORDERS ► Record electrical power, event sequences and other variables accurately with the most complete line of direct writing recorders found anywhere: the durable, time-proven Esterline Angus Series A, plus the CF and CH models (formerly GE). For utility or industrial use, the diversity of this line allows virtual custom tailoring to user specifications. Portable, panel-mount, pole-mounting offerings and weatherproof cases are available. **For the full story, request:**

C200 Complete Line Series A
C300 CF and CH Recorders
C203 Series A Wattmeters
C204 Series A Ammeter-Voltmeter
D300 Series A Event Recorders

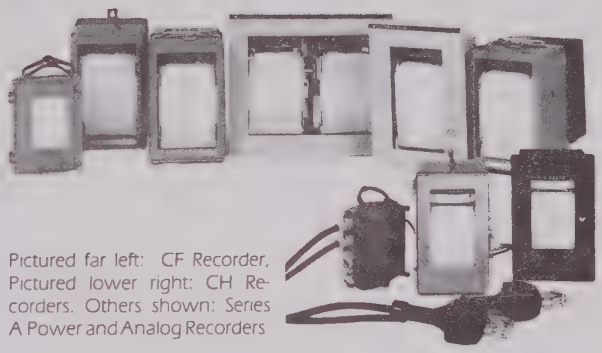

Pictured far left: CF Recorder. Pictured lower right: CH Recorders. Others shown: Series A Power and Analog Recorders

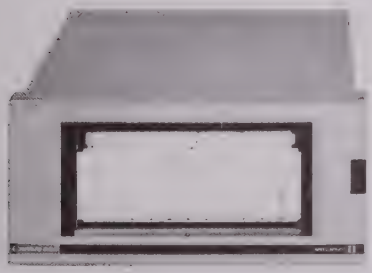

◄ SPEED SERVO® II WIDE CHART RECORDERS. One or two channel (10 inch) chart servo recorders for industrial, lab and OEM users, accept inputs from 1mV to 100V DC, mA, thermocouples, RTDs and a host of other signal types. Features a rugged, one-piece linear servo system with 0.25 second full scale response. Unique switching arrangement in modular amplifiers eliminate the need for range changes. Dedicated models available for specific applications. "Utility Load Dispatch" model provides front writing pens with flourescent pen targets (for instant trace visibility), and a large scale for easy reading at a distance. Wide choice of chart speeds, ink or inkless writing panel, rack and benchmount configurations. **To find out more, request catalog F700!**

TDA 254 TRANSIENT & DISTURBANCE ANALYZER ► Traces potential causes of electrical power disturbances that create computer and other sensitive electronic equipment malfunctions. Monitors power line disturbances falling outside user-programmed thresholds, classifies them according to type, magnitude, duration and time of occurrence, and provides a readable plain-language, thermal printout of all data. Simultaneously monitors up to three AC phases from 50 - 800V AC and one DC channel from 1 - 22V DC. RS232 interface with selectable baud rate enables remote data collection. Switch-selectable 115/230V AC operation with internal UPS battery, plus standby mode for complete portability without resetting thresholds and clocks. **Request catalog F400 for complete details!**

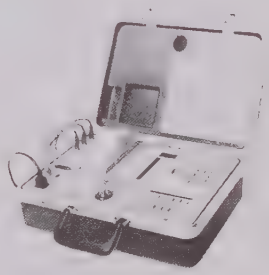

ACCESSORIES. Esterline Angus offers a complete line of chart papers, disposable pens, inks and other accessories manufactured to EA's precise quality standards! Only EA accessories guarantee the quality and performance you expect! Substitutes by other manufacturers may not meet EA's standards of performance and might require unwarranted modification of your instruments. EA accessories insure reliable performance when used in your EA instruments and offer you the highest quality at consistently competitive prices!

FIELD SERVICE. We service what we sell! Esterline Angus has field service locations worldwide for calibration and repair on all Esterline Angus instruments (plus other manufacturer's lines of instruments), on-site or in-the-shop! Call Esterline Angus Field Service to find out the location nearest you: 317-244-7611.

ESTERLINE ANGUS INSTRUMENT CORP.
P.O. Box 24000
INDIANAPOLIS, IN 46224
TELEPHONE: 317-244-7611
TELEX: 027-419
CABLE: ESTANGO
FACSIMILE: 317-247-4749

INSTRUCTIONS FOR INSTRUMENT
Serial Number

Instruments for Data Acquisition • Analysis • Recording • Controlling

- Space Exploration
- Scientific Research
- Production Analysis
- Process Monitoring and Control

ESTERLINE ANGUS
AN ESTERLINE COMPANY

Esterline Angus Instrument Corporation
Box 24000, Indianapolis, Indiana 46224
Tel. 317-244-7611
Cable: Estango Telex: 027-419

M804D10/11
.5M0388

PRINTED IN U.S.A.

SECTION 3

INSTRUMENT DATA SHEETS

REVISIONS					DWG.NO. S-22906-1-☐
ECN	REV	DESCRIPTION	DATE	APPROVED	
——	C	REDRAWN - NEW FORMAT	10-12-83		
12756	D	SEE ECN SMA	4-18-83		

PRODUCT SPECIFICATIONS
STOCK RECORDER NO. S22906-1-☐

☐ 120V - 60 HZ ☐ 120V - 50 HZ
☐ 240V - 60 HZ ☐ 240V - 50 HZ

POWER INPUT (STANDARD): CURRENT: 0-5/10/25/50/100/250/500 & 1000 AMPS AC (50-60) HZ SWITCH SELECTABLE. ACCURACY: ±2.5% (ISOLATION, 600V)
VOLTAGE: 0-150/300/600V, 50/60 HZ SWITCH SELECTABLE
ACCURACY: ±1%

AMPLIFIERS: INDEPENDENTLY ISOLATED AMPLIFIER MODULES PER CHANNEL.
AC VOLTAGE AND CURRENT RANGES, SWITCH SELECTABLE

BASIC ASSEMBLY: 804D10-☐

SIGNAL INPUTS/OUTPUTS: CURRENT: 1 ma DC; VOLTAGE: 1V DC, ACCURACY: VOLTAGE ±.6%; CURRENT ±.5%

ZERO: LEFT-HAND ZERO

RESPONSE: 0.5 SECOND FULL SCALE

POWER REQUIREMENTS: DUAL-PRIMARY POWER TRANSFORMER PROVIDES 115/230 VOLTS ±10% 60HZ THROUGH A REAR SELECTOR SWITCH. APPROXIMATELY 30VA.

CHART: 59322-T100

CHART DRIVE: MULTI-SPEEDS OF 2, 5, 10, 15, 30 & 60 CM/HR AND CM/MIN

SCALES: 804A632

CASE: BENCH CASE - BLUE WRINKLE FINISH

ACCESSORY KIT: ☐ 804A903 ☐ 804A903-1
STANDARD EVENT PENS

EVENT PENS

☐ EP1 6V DC
☐ EP2 12V DC
☐ EP3 24V DC
☐ EP4 120V AC
☐ EP5 240V AC
☐ EP6 SWITCH TYPE

M# _____
SERIAL # _____
SHOP ORDER # _____
SCHEDULE # _____

CHANNELS A B C
ALARMS ☐ ☐ ☐

QTY 1 # S22908-1 CARTON
3.2 lbs FOAM

"DATA SHEET"

MATERIAL	DN. E. KOHL	DATE 10-11-83	ESTERLINE ANGUS INSTRUMENT CORP INDIANAPOLIS, IND U S A
	CH		
MAT'L NO	AP		M/S III VOLTMETER / AMMETER STOCK UNIT "4"
FINISH	UNLESS OTHERWISE SPECIFIED DIMENSIONS ARE IN INCHES TOLERANCES ANGLES ± FRACTIONS ± DECIMALS ± REMOVE BURRS AND SHARP EDGES		SIZE / FSCM NO. 72264 / DWG. NO. S-22906-1-☐
			SCALE —— / RELEASED EPR 6519 / SHEET 1 OF 1

6953

REVISIONS					DWG.NO. S-22907-1-☐
ECN	REV	DESCRIPTION	DATE	APPROVED	
—	C	REDRAWN - NEW FORMAT	10-13-83		
2756	D	SEE ECN skn	4-13-85		

PRODUCT SPECIFICATIONS
STOCK RECORDER NO. S22907-1-☐

☐ 120V - 60 HZ ☐ 120V - 50 HZ
☐ 240V - 60 HZ ☐ 240V - 50 HZ

BASIC INSTRUMENT: 804D11-☐

POWER INPUT (STANDARD): CURRENT: 0-5/10/25/50/100/250/500 & 1000 AMPS AC (50-60 HZ) SWITCH SELECTABLE.
ACCURACY: ±2.5% (ISOLATION, 600V)
VOLTAGE: 0-150/300/600 V. (50-60 HZ) SWITCH SELECTABLE. ACCURACY: ±1%

AMPLIFIERS: INDEPENDENTLY ISOLATED
AC VOLTAGE AND CURRENT RANGES, SWITCH SELECTABLE

SIGNAL INPUTS/OUTPUTS: CURRENT: 1 ma DC, VOLTAGE: 1 V DC
ACCURACY: VOLTAGE ±.6%; CURRENT ±.5%

ZERO: LEFT-HAND ZERO

RESPONSE: 0.5 SECOND FULL SCALE

POWER REQUIREMENTS: DUAL-PRIMARY POWER TRANSFORMER PROVIDES 115/230 VOLTS ±10% 60 HZ THROUGH A REAR SELECTOR SWITCH. APPROXIMATELY 30 VA.

CHART: 59322-T100

CHART DRIVE: MULTISPEED - SPEEDS OF 2,5,10,15,30 & 60 CM/HR AND CM/MIN.

SCALES: 723A55-6

CASE: BENCH CASE - BLUE WRINKLE FINISH

ACCESSORY KIT: ☐ 804A902 STANDARD ☐ 804A902-1 EVENT PENS

EVENT PENS

☐ EP1 6V DC
☐ EP2 12V DC
☐ EP3 24V DC
☐ EP4 120V AC
☐ EP5 240V AC
☐ EP6 SWITCH TYPE

M# _____
SERIAL # _____
SHOP ORDER # _____
SCHEDULE # _____

CHANNELS	A	B	C
ALARMS	☐	☐	☐

QTY 1 # S22908-1 CARTON
3.2 lbs FOAM

"DATA SHEET"

MATERIAL	DN. E. KOHL	DATE 10-13-83	ESTERLINE ANGUS INSTRUMENT CORP INDIANAPOLIS, IND. U.S.A
	CH.		
A MAT'L NO	AP		M/S I AC VOLTMETER / AMMETER STOCK "5"
FINISH	UNLESS OTHERWISE SPECIFIED DIMENSIONS ARE IN INCHES TOLERANCES ANGLES ± FRACTIONS ± DECIMALS ± REMOVE BURRS AND SHARP EDGES		SIZE / FSCM NO. 72264 / DWG. NO. S-22907-1-☐
			SCALE — / RELEASED EPR 6519 / SHEET 1 OF 1

6953

SECTION 4

THEORY OF OPERATION

SECTION 4
THEORY OF OPERATION

4.1 OVERALL SYSTEM

a. The Esterline Angus Ammeter/Voltmeter Models S-22906 and S-22907 Recorders are constructed in modular form. Each recording channel includes an Ammeter-Voltmeter Module, a Servo Amplifier board assembly, and a clamp-on Current Transformer. Each instrument also includes an electronic Chart Drive Module and chart transport assembly. Principal electronic circuits of the entire system are illustrated in the simplified block diagram accompanying these instructions.

b. All input signals enter at a connection panel on the rear of the recorder. AC current inputs are supplied from clamp-on transformers to the recorder via a 10-foot cable terminating in banana plugs at the transformer end, and a polarized "Jones" socket at the recorder end. AC voltage inputs enter through color-coded, spadelug-terminated, conductors to matching color-coded terminal blocks (one per recording channel). Terminals are also provided for external 0-1V DC or 0-1mA DC signal inputs, which are fed directly to the Servo Amplifier for subsequent measurement and recording on the chart paper.

c. The standard clamp-on current transformer supplied with each recorder consists of a hand-held unit capable of inputs up to 1000 amps at potentials up to 600V. It has a 1000:1 current ratio which provides for a 1-amp output with a 1000-amp input. The circular core has a rectangular cross section and is divided transversely into two half-cores. The winding around the two half-cores is uniform and is embedded into a resin which provides electrical insulation and protection from physical shock.

4.2 AMMETER-VOLTMETER MODULE

a. External AC power signals are isolated from the module input by the clamp-on transformer for current inputs and by an internal potential

transformer for voltage inputs. The 0-1A current signals are converted to measurable voltage by shunt Resistor R1, while potential inputs are derived from the secondary of Isolation Transformer T1. The voltage signals are conditioned by a Volts-Calibration Network represented by R23 in the block diagram. Both input signals are connected to Selector Switch Deck S1b, which is part of the front-panel RANGE switch. Here the operator selects either AC AMPS or AC VOLTS for measurement.

b. The signal selected is next fed to Gain Amplifier IC1, where the RANGE switch position determines the specific output signal level. This is accomplished by a Resistive Divider Network (R13-R20) on Switch Deck S1a. The AC signal is then coupled to a rectification circuit through Capacitor C1.

c. The Active Rectifier circuit is primarily composed of IC2 and a pair of 1N4148B signal diodes. This circuit converts the applied AC to a DC signal voltage. Potentiometer R10 is provided for an output signal calibration of 0-1V DC. The output signal is then passed through a multi-section Filter Network and is terminated at a connection point on the rear panel of the instrument.

4.3 SERVO AMPLIFIER MODULE

a. The Servo Amplifier assembly translates the 0-1V DC signal from the Ammeter-Voltmeter module into pen positions for recording the measured power parameter. As shown in the block diagram, jumper wire W101 connects the DC signal into a Limiter and Filter Network at the input to the Servo Amplifier. Since an external 0-1V DC signal can also be applied directly to the amplifier, a pair of Zener diodes in the limiter stage protect the module from overload.

b. Input Signal E_s from the limiter is fed through Signal Follower Z1a to a Voltage-Summing Network. In addition to E_s, this network also receives two other voltages--a Gain-Regulating Voltage e_g derived from a feedback circuit in the servo loop, and a Zeroing Voltage E_z from Z1b in the zero circuitry. Both voltages are made adjustable by Gain pot R21 and ZERO pot Rz, respectively.

c. Conditioned Analog Signal Voltage e_c from the summing circuit is connected to the inverting input of the Differential Amplifier Z2b. The non-inverting input of this opamp receives a composite Feedback Signal E_f, which is made up of Voltages E_p and e_v. Both voltages E_p and e_v originate in the servo feedback loop. Signal coupling from the wiper arm of Feedback Pot R501 is provided by Feedback Buffer Z2c. Voltage E_p is directly proportional to the wiper-arm (pen) position; whereas, the Damping Voltage e_v is dependent upon the velocity of the Servo Motor B102. Voltage e_v is coupled through Differentiating Capacitor C6 and serves to bring the servo motor to a correct stopping point. The value of the damping capacitor has been selected for optimum response characteristics.

d. The Differential Amplifier compares the Analog Signal e_c with the Feedback Signal E_f and, under "off-null" conditions, an Error Signal Voltage e_r is developed at the differential input. This signal is amplified and then fed to an output driver stage. The driver makes use of two complimentary Power Transistors Q1 and Q2 which, in turn, deliver DC voltage to drive the servo balance motor.

e. Drive voltage is applied until the "follow-up" feedback pot reaches a voltage position equal to e_c. At this point the system is "balanced" and the recording pen will come to rest at a new position on the chart. The Error Signal Voltage e_r may be expressed in simplified form as follows:

$$e_r = [E_s + (E_z + e_g)] + (E_p + e_v)$$

or:

$$e_r = e_c + E_f$$

f. Reference voltage for the feedback pot is derived from an adjustable, temperature-compensated reference supply circuit. In this supply, a +15 volts DC is divided down, zener-regulated, and filtered to provide a 6.2V reference source. An adjustable Cal pot R20 is provided for calibration of the recording span.

4.4 POWER SUPPLY

a. The DC power supply circuitry for each recording channel is part of each servo amplifier PC board assembly. Operating from either a 115V or 230V line supply, the stepped-down secondary voltage of Power Transformer T101 is applied to a full-wave, bridge-type, rectifier circuit that provides unregulated +24V DC and -24V DC filtered-output supplies. These 24V sources supply the operating voltages for the output driver stage of the Servo Amp circuitry.

b. The positive and negative 24V sources are also applied to a voltage-dropping and regulating, dual-polarity, integrated circuit. This IC is internally protected against thermal overloads and short circuits. The dual-polarity output from the regulator is further filtered and provides ripple-free +15V and -15V DC supplies. These potentials are used for operating voltages in other various stages of the Servo Amp circuitry and also power the Ammeter-Voltmeter Module.

4.5 CHART DRIVE MODULE

a. The entire chart-drive system consists of three front-panel switches, a stepper drive PC board and a DC stepper motor. The switches and PC board are mounted within the module, and the stepper motor is located within the inner chassis assembly. The stepper motor advances the chart at a rate determined by the pulse frequency selected when the chart speed-rate switch is placed in one of its six positions.

b. The basic timing frequency of 120 cycles (100 @ 50Hz) is a result of ripple frequency from the fullwave bridge circuit shown in the block diagram. This sinewave frequency is passed on to the Schmitt Trigger Circuit (Q1 and Q2) through Capacitor C4. The Schmitt trigger shapes the input waveform into pulses acceptable for divider logic circuits that follow.

c. The pulse train from the trigger circuit is applied to chart Speed Selector S1 through various Frequency-Divider stages. S1 is used to select the desired pulse rate which, in turn, is coupled either directly to S2 for

minute speeds, or indirectly to S2 through additional ÷60 circuitry for hour speeds. The output frequency of Hour/Minute Switch S2 is then fed to Pulse Sequencer Z6. This stage is a dual flip-flop that triggers alternate pairs of stepper-motor windings through Driver Transistors Q3, Q4, Q5 and Q6.

d. The Stepper Motor is designed with a permanent magnet rotor and an electro-magnetic stator. It rotates in discrete angular steps and is capable of stepping a maximum of 120 times per second. A specific motor-drive pulley is supplied for either 50 or 60Hz operation.

e. The Bridge Rectifier stage in the module also supplies a +12V DC potential to Voltage Regulator Z7. This regulator circuit provides a +6V DC output that is used to drive the stepper motor and to power all ICs in the system.

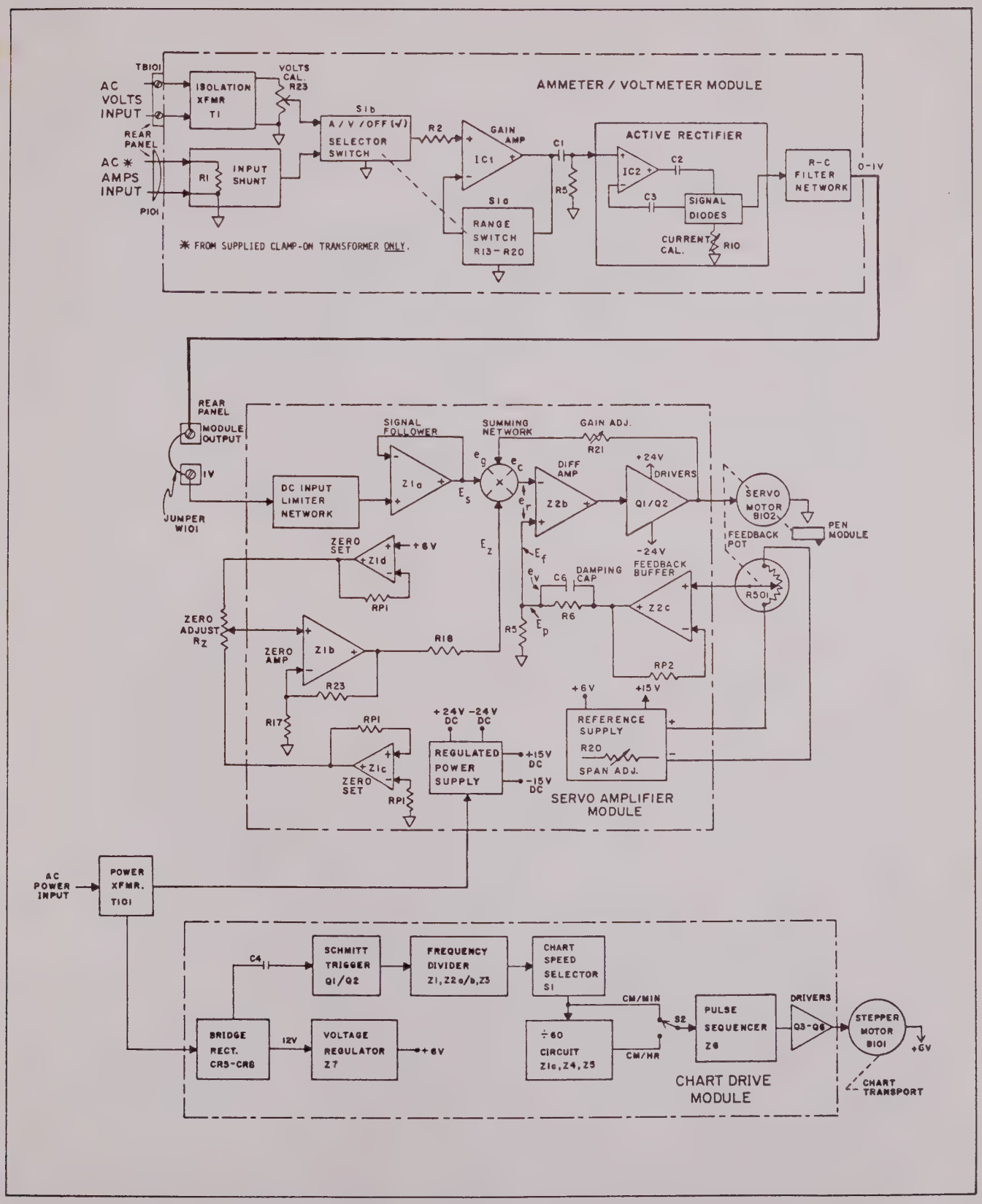

Functional Block Diagram of AC Power Measuring and Recording System.

SECTION 5

RECORDER TEST AND CALIBRATION

SECTION 5

RECORDER TEST AND CALIBRATION

5.1 CALIBRATION

a. Esterline Angus AC Ammeter-Voltmeter recorders are precisely calibrated at the factory and should not require readjustments unless calibration controls have been inadvertently changed or measuring circuit components have been replaced in the field.

b. Recorder accuracies are often checked by a direct comparison with other AC power monitoring or indicating instruments. The validity of such a test, however, depends upon the actual dynamic accuracy of the reference source--which should be considerably better than the specified recorder accuracy. Only technically qualified personnel having access to precision test equipment should attempt recorder calibration in the field.

c. The following test and calibration procedures assume that: recommended power is applied to the recorder, the correct Esterline Angus chart is installed, the inking system is operational, and all mechanical and electrical components are functioning properly. If a malfunction is suspected, correct the trouble before attempting recalibration.

5.2 EQUIPMENT

The following test instruments and tools are required for performing complete calibration and testing internal power supply voltages:

(1) Precision DC voltage standard for +1.000V source. Accuracy must be ±0.05% or better.

(2) Precision DC current standard for 1.000mA. Accuracy must be ±0.05% or better.

(3) Variable AC voltage standard for up to 600V rms (50 or 60 Hz) sine-wave output with less than 2.0% distortion. Accuracy must be 0.1% or better.

(4) Variable AC current standard for up to 1A rms (50 or 60 Hz) sine-wave output with less than 2.0% distortion. Accuracy must be 0.1% or better.

(5) Current Input Connections: Detached clamp-on transformer lead may be used, or a cable may be fabricated using female connector Part No. KMC-56.

(6) Digital voltmeter with an indicating accuracy of 0.05% and a resolution of 100uV or better.

(7) Insulated screwdriver or alignment tool with 1/8" blade, plus basic disassembly tools.

5.3 OVERALL CALIBRATION CHECK

The following test procedures are applicable to both single- and three- pen Ammeter/Voltmeter recorders. All tests are made without the use of clamp-on current transformers. Regulated outputs from precision calibration standards must be used as signal input sources. All recording scaling is accomplished by setting the RANGE Selector Switch on the front panel of the Ammeter-Voltmeter module.

> CAUTION: Input signals should not exceed those specified in the following instructions.

(1) Place front-panel POWER and CHART switches in "OFF" positions. Move Pen Lift lever to raise pen or pens from chart.

(2) Disconnect AC voltage and current signal leads from external sources. Connect power cord to AC source specified on rear cover or Data Sheet.

(3) Remove rear cover to gain access to connection panel. Place recorder POWER switch in "ON" position and permit instrument to warm up for at least ten minutes.

(4) To short input of Servo Amplifier, disconnect end of jumper (W101) from Module Output terminal and connect it to DC common "COM" terminal. Other end of jumper should connect to "1V" Channel Input terminal.

> NOTE: When calibrating 3-pen recorders, select only one (red, black or blue) channel at a time, and remove other pen cartridges.

(5) Move Pen Lift lever to lower channel pen onto chart. Pen point should come to rest at zero reference line on chart(±0.5% of span).

(6) Remove jumper (W101) and connect DC voltage standard across "1V" and "COM" Channel Input terminals.

(7) Adjust standard for +1.000V DC output, and apply signal. Pen point should come to rest at full-scale line on chart (±0.6% of span). If it does, disconnect standard and proceed with Step 9. On 3-pen models, repeat Steps 4 thru 7 for each recording channel.

> NOTE: To check current calibration, use 1.000mA DC current standard and connect jumper between 1ma and 1V Channel Input terminals.

(8) If above DC tests are not within acceptable tolerance, perform Servo Amp Calibration as directed in paragraph 5.4.

(9) To check calibration of Ammeter-Voltmeter Module, reconnect jumper (W101) between Module Output terminal and "1V" Channel Input terminal.

(10) Place front-panel RANGE switch in its "OFF/ZERO√" position. Recording pen should come to rest at zero reference line on chart (±0.5% of span).

(11) Place front-panel RANGE switch in "1000 AMPS AC" position, and connect AC current standard across Current Transformer Input connector (P101) on rear panel.

(12) Adjust output of standard for 1.000A rms (50/60 Hz) and apply signal to recorder. Pen Point should come to rest at full-scale line on chart (±1.5% of span).

(13) Disconnect current standard and place RANGE switch in "600 AC VOLTS" position. Connect AC voltage standard across Voltage Input terminals (TB101) on rear panel.

NOTE: On 3-pen models, select only one (red, black or blue) channel at a time.

(14) Adjust output of standard for 6000.0V rms (50/60 Hz) and apply signal to recorder. Pen point should come to rest at full-scale line on chart (±1.0% of span). On 3-pen models, repeat Steps 9 through 14 for each recording channel.

WARNING: High-Voltage will be present when operating calibration standard.

(15) Disconnect voltage standard. If above AC test are not within acceptable tolerance, perform Ammeter-Voltmeter Module Calibration as directed in paragraph 5.5.

5.4 SERVO AMP CALIBRATION

(1) To calibrate Servo Amplifier, turn off power and gain access to PC board by removing top cover from recorder.

NOTE: On 3-pen models, locate board for recording channel (A=red, B=black and C=blue).

(2) Connect DVM to "+15V DC" and then "-15V DC" terminal posts on PC board (see Figure 5-1). Turn on power and permit recorder to warm up. Readings with respect to "COM" on board should be 15 volts, ±5.0%. Disconnect DVM.

(3) Remove rear-panel jumper from "1V" Channel Input terminal and connect DC voltage standard across "1V" and "COM" terminals. Adjust standard for +0.5V DC output.

(4) Apply input signal to recorder. Pen should come to rest at approximately mid-scale. To check deadband, momentarily displace pen by slightly rotating pinion gear on top of chassis. Manually advance chart after each displacement to verify pen position.

(5) Deadband should be within 0.2% of span; if it is not, carefully reset servo GAIN ADJUST (R21) until deadband is acceptable (see Figure 5-1).

CAUTION: Instability can result if servo gain is set too high.

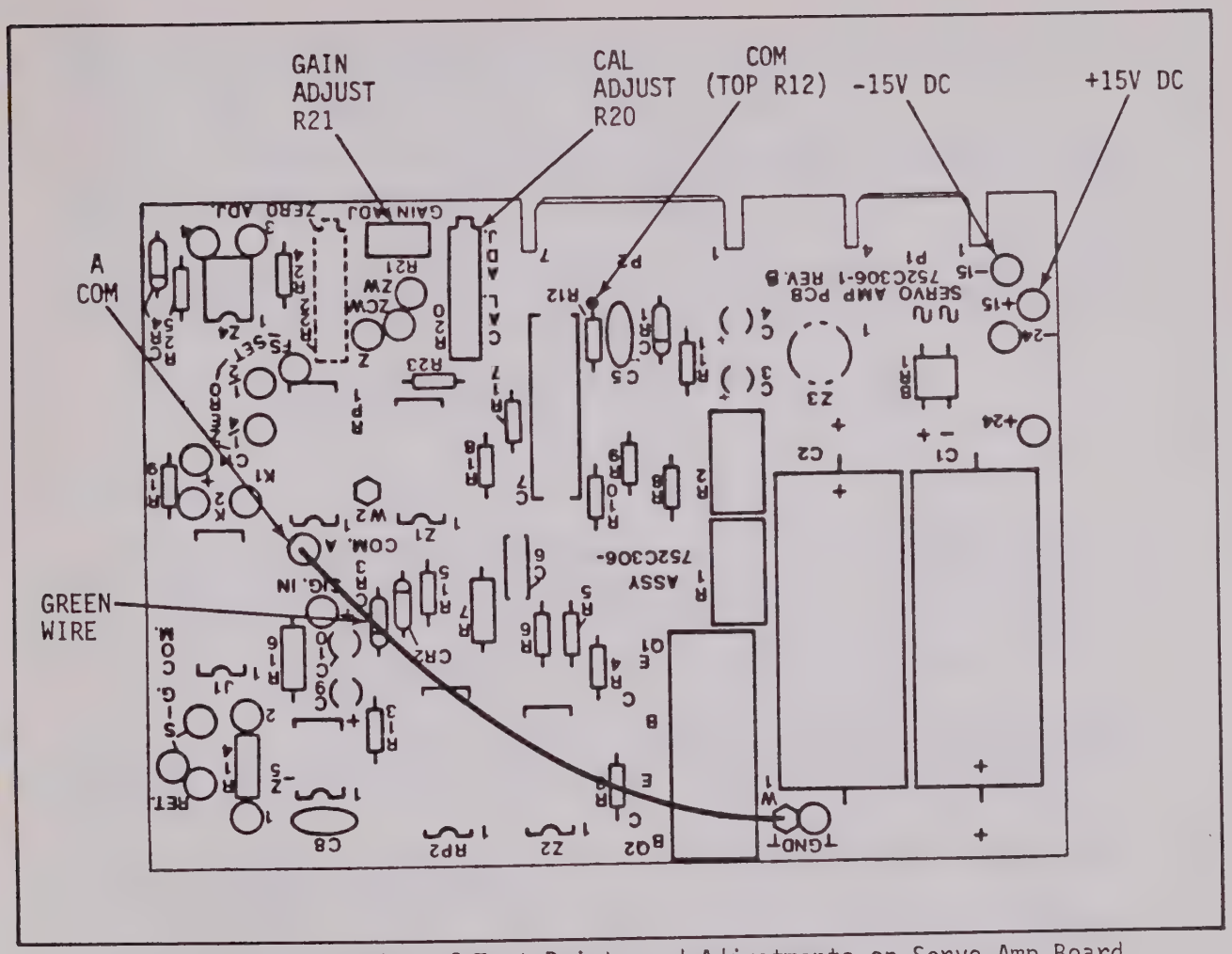

Figure 5-1. Location of Test Points and Adjustments on Servo Amp Board.

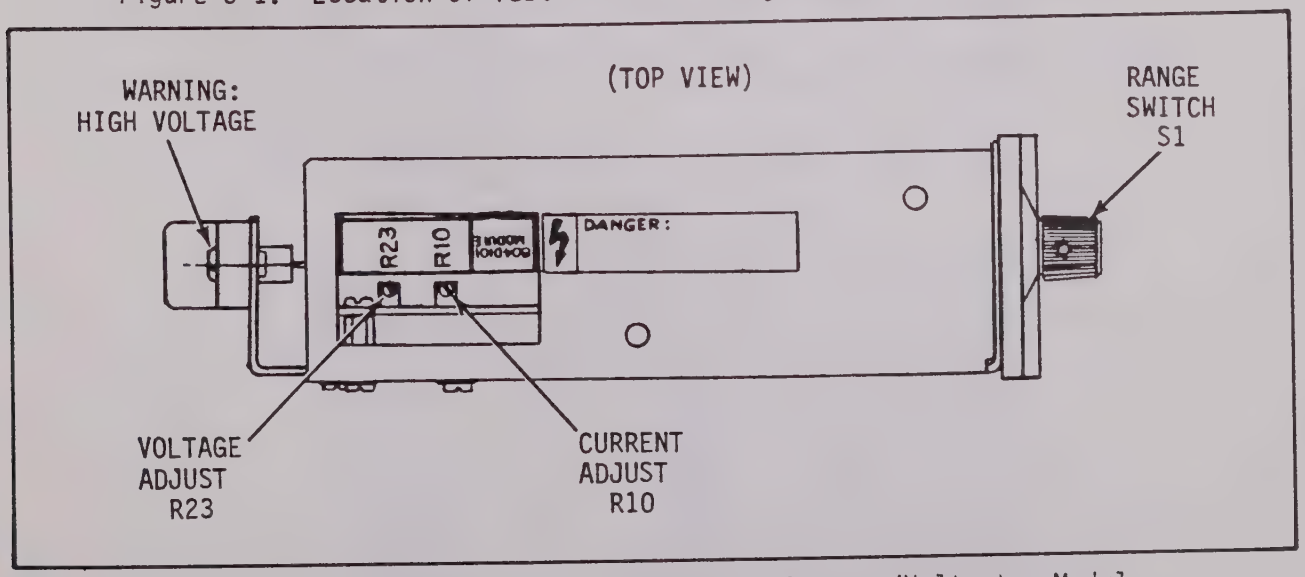

Figure 5-2. Location of Adjustments on Ammeter/Voltmeter Module.

(6) Reset DC standard for zero (0V) output. Pen point should come to rest at zero reference line on chart. If it does not, carefully adjust channel ZERO on front panel. Advance chart to verify pen-trace position.

(7) Reset standard for +1.000V DC and apply to recorder. Pen should come to rest at full-scale line on chart. If it does not, carefully reset CAL ADJUST R20 for full-scale deflection.

(8) Since adjustment interaction can occur, complete Servo Amplifier calibration by repeating Steps 6 and 7. Pen positions must be within ±0.5% of span or less. Disconnect standard and restore rear-panel wiring.

NOTE: If above calibration does not meet specification, troubleshoot servo system.

5.5 A/V MODULE CALIBRATION

(1) To calibrate Ammeter/Voltmeter Module, turn off power and gain access to module adjustments by removing top cover from recorder. In 3-pen models, each module is identified by color dot on front panel.

NOTE: DC supply voltages are derived from Servo Amp PC board (±15V, ±5.0%).

(2) Remove rear-panel jumper (W101) from Module Output terminal, and connect DVM across this terminal and "COM" terminal. Turn on power and permit recorder to warm up.

(3) Place front-panel RANGE switch in its "OFF/ZERO√" position. DVM should read 0.00V, ±4.0mV maximum offset.

(4) Place RANGE switch in its "1000 AMPS" position and connect AC current standard across Current Transformer Input connector on rear panel.

(5) Set output of standard for 1.000A and apply signal to module. Carefully reset CURRENT ADJUST R10 (Figure 5-2) for DVM reading of +1.000V.

NOTE: Other ranges may be checked by resetting standard and RANGE switch as directed in Table 5-1.

Table 5-1. Current Range Tests.

STANDARD INPUT (AC CURRENT)	RANGE SWITCH POSITION	DVM READING (+DC VOLTS)
1.000A	1000 AMPS	1.00 (±0.4%)
0.100A	500 AMPS	0.20 (±1.0%)
0.100A	250 AMPS	0.40 (±1.0%)
0.100A	100 AMPS	1.00 (±0.5%)
10.00mA	50 AMPS	0.20 (±1.0%)
10.00mA	25 AMPS	0.40 (±1.0%)
10.00mA	10 AMPS	1.00 (±0.5%)
5.000mA	5 AMPS	1.00 (±0.5%)

(6) Disconnect current standard and place RANGE switch in its "600 VOLTS" position. Connect AC voltage standard across Voltage Input terminals (TB101) on rear panel.

WARNING: High-voltage will be present on recorder terminals.

(7) Adjust output of standard for 600.0V and apply to module. Carefully reset VOLTAGE ADJUST R23 for DVM reading of 1.000V.

NOTE: Other ranges may be checked by resetting standard and RANGE switch as directed in Table 5-2.

Table 5-2. Voltage Range Tests.

STANDARD INPUT (AC VOLTAGE)	RANGE SWITCH POSITION	DVM READING (+DC VOLTS)
600.0V	600 VOLTS	1.00 (±0.4%)
150.0V	300 VOLTS	0.50 (±1.0%)
150.0V	150 VOLTS	1.00 (±0.5%)

(8) Disconnect DVM and voltage standard, and restore rear-panel wiring.

NOTE: If above calibration does not meet specification, replace or troubleshoot Ammeter/Voltmeter Module.

SECTION 6

SCHEMATIC DIAGRAMS

NOTE: SEE SECTION 7 FOR OVERALL WIRING DIAGRAMS.

REVISIONS					
ECN	ZONE	REV	DESCRIPTION	DATE	APPROVED
C2035		A	CHG'D NOTE * FROM 1% TO .25%	JAN 17, 81	
C2202		B	ADDED P.C. BD. PAD, KPC PIN, "TB" TERM. STRIP. CHG'D R21, 22 TO 10Ω	7-16-81	

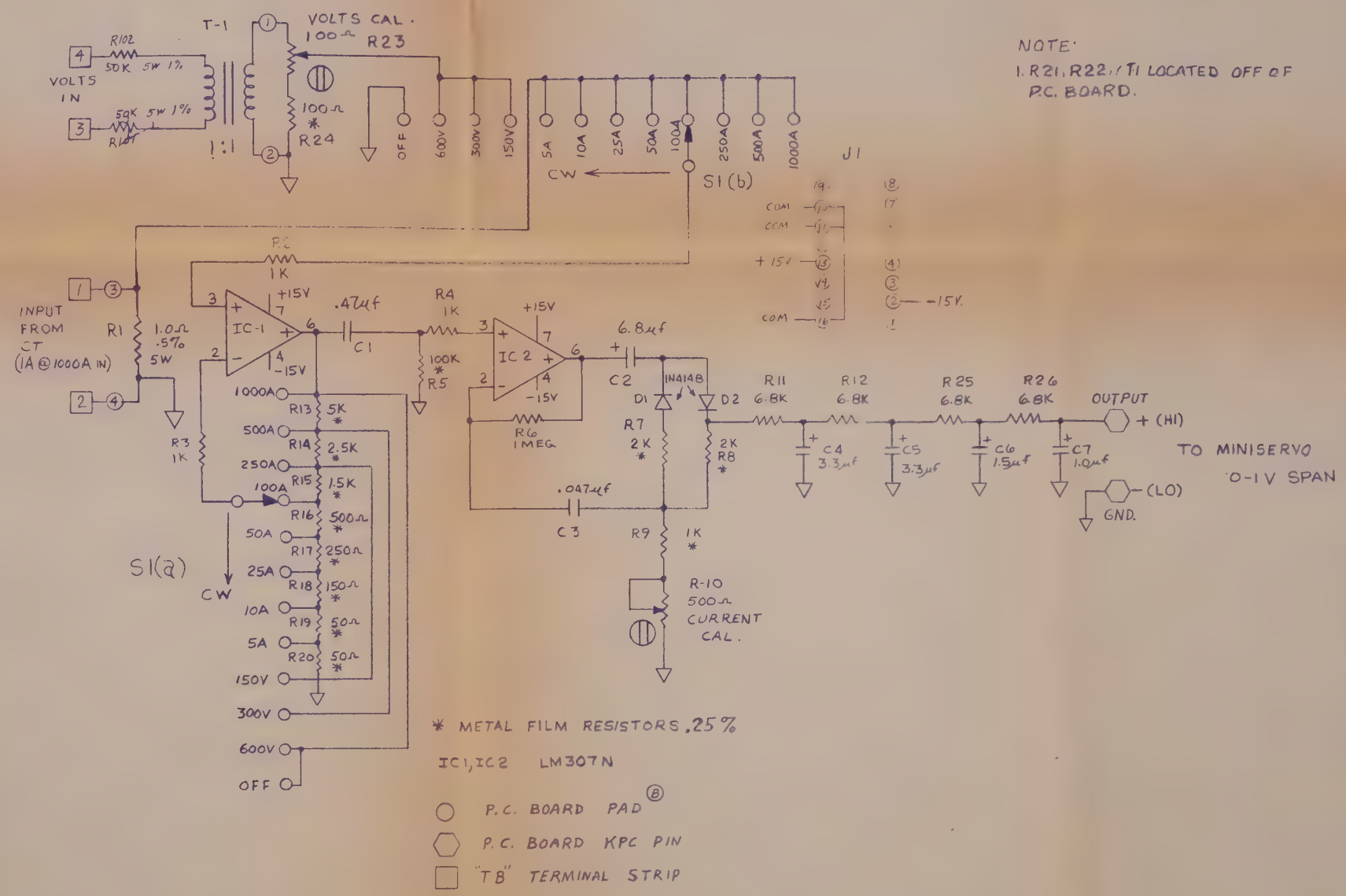

NOTE:
1. R21, R22, T1 LOCATED OFF OF P.C. BOARD.

* METAL FILM RESISTORS .25%

IC1, IC2 LM307N

○ P.C. BOARD PAD (B)

⬡ P.C. BOARD KPC PIN

□ "TB" TERMINAL STRIP

QTY. REQD.	DATA SHEET ITEM	PART NO.	DESCRIPTION	REMARKS	ITEM NO.

PARTS LIST

NEXT ASSY	USED ON
APPLICATION	

MATERIAL

EA MAT'L NO.

FINISH

DN. D. DRAKE DATE 12-2-80

CH.

AP.

UNLESS OTHERWISE SPECIFIED DIMENSIONS ARE IN INCHES
TOLERANCES:
ANGLES ±
FRACTIONS ±
DECIMALS ±
REMOVE BURRS AND SHARP EDGES

ESTERLINE ANGUS INSTRUMENT CORP.
INDIANAPOLIS, IND. U.S.A.

AMP/VOLT ASS'Y
P.S.D.R. (SCHEMATIC)

SIZE C | FSCM NO. 72264 | DWG. NO. 804C301-S

SCALE NONE | RELEASED EPR C6448 12-1-80 | SHEET 1 OF 1

DWG NO. 804C301-S

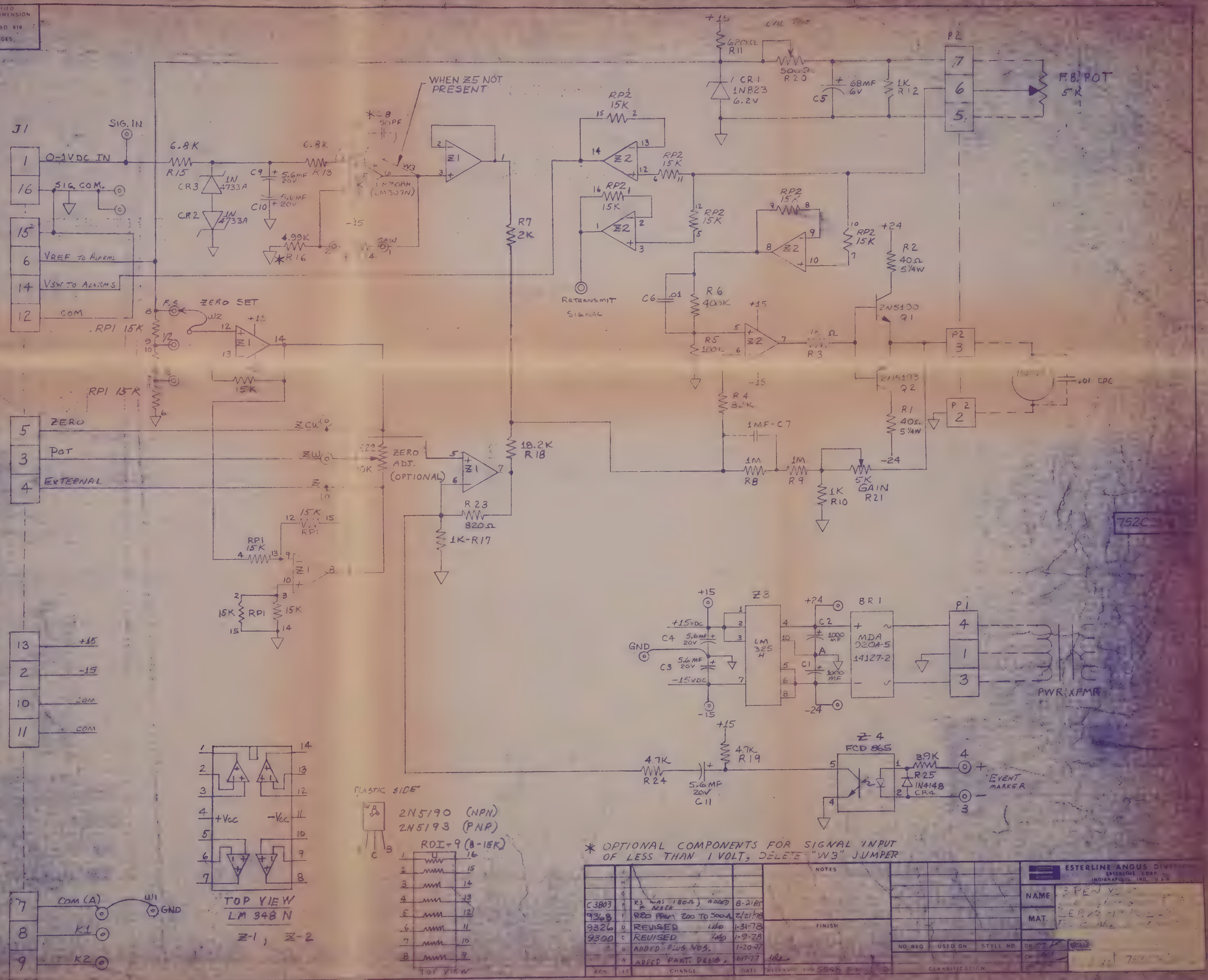
UNLESS OTHERWISE SPECIFIED
TOLERANCE ON FRACTIONAL DIMENSION
LENGTH DIAMETER
ECCENTRICITY - NOT TO EXCEED .010
TOTAL INDICATOR READING
PLATED PARTS MUST FIT GAUGES, AFTER BEING PLATED
J1
SIG. IN
0-1VDC IN
SIG. COM.
VREF TO ALARMS
VSW TO ALARMS
COM
ZERO
POT
EXTERNAL
+15
-15
COM
COM (A)
GND
K1
K2
WHEN Z5 NOT PRESENT
ZERO SET
ZERO ADJ. (OPTIONAL)
RETRANSMIT SIGNAL
F.B. POT 5K
GAIN R21
PWR XFMR
EVENT MARKER
TOP VIEW LM 348 N
Z-1, Z-2
PLASTIC SIDE
2N5190 (NPN)
2N5193 (PNP)
RDI-9 (8-15K)
TOP VIEW
* OPTIONAL COMPONENTS FOR SIGNAL INPUT OF LESS THAN 1 VOLT, DELETE "W3" JUMPER
ESTERLINE ANGUS DIVISION
ESTERLINE CORP.
INDIANAPOLIS, IND. U.S.A.
NAME
MAT.
NOTES
FINISH
NO. REQ
USED ON
STYLE NO
CLASSIFICATION
C3803 R3 WAS 180Ω ADDED * NOTE 8-21-85
9368 R20 FROM 200 TO 500Ω 2/21/78
9326 REVISED 1-31-78
9300 REVISED 1-9-78
ADDED PLUG NOS. 1-20-77
ADDED PART. DESIG. 1-17-77
ECN LET CHANGE DATE
RELEASED FOR 5548

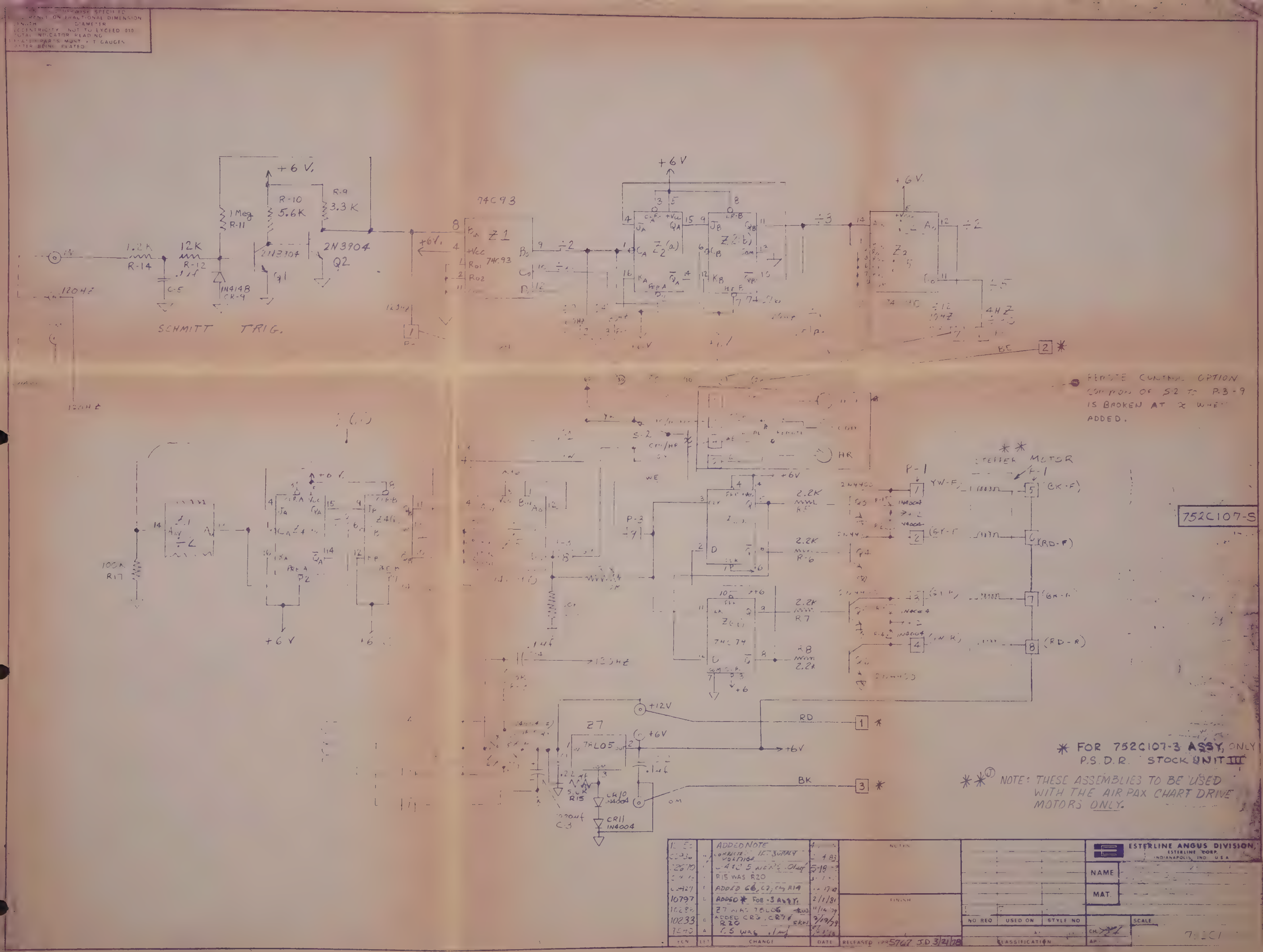

SCHMITT TRIG.
74C93
Z1
Z2
Z4
Z7
74L05
74C74
STEPPER MOTOR
+6V
+12V
120HZ
4HZ
REMOTE CONTROL OPTION COMMON OF S-2 TO P-3-9 IS BROKEN AT x WHEN ADDED.
752C107-S
* FOR 752C107-3 ASSY, ONLY P.S.D.R. STOCK UNIT III
** NOTE: THESE ASSEMBLIES TO BE USED WITH THE AIR PAX CHART DRIVE MOTORS ONLY.
ESTERLINE ANGUS DIVISION, ESTERLINE CORP. INDIANAPOLIS, IND. U.S.A.
NAME
MAT.
SCALE
NO REQ
USED ON
STYLE NO
CLASSIFICATION
RELEASED EPR 5767 JD 3/21/78
ADDED NOTE
R15 WAS R20
ADDED C6, C7, CR9 R14
ADDED * FOR -3 ASSY.
Z7 WAS 78L06
ADDED CR6, CR7 & R20
C5 WAS .1uf

SECTION 7

ASSEMBLY DRAWINGS AND PARTS LISTS
(WIRING DIAGRAMS)

SECTION 7

ASSEMBLY DRAWINGS AND PARTS LISTS

Table 7-A. Index for Section 7.

ITEM NO.	DESCRIPTION	FORM NO.
1	Final Assembly, S-22906 Recorder	804D10 Sht. 1
2	Wiring Diagram, S-22906 Recorder	804D10 Sht. 2
3	Final Assembly, S-22907 Recorder	804D11 Sht. 1
4	Wiring Diagram, S-22907 Recorder	804D11 Sht. 2
5	Chassis Assembly, S-22906 Recorder	804D100
6	Chassis Assembly, S-22907 Recorder	804D102
7	PCB Assembly, Amp/Volt Module	804C301-6
8	PCB Assembly, Servo Amplifier	752C306-8
9	PCB Assembly, Chart Drive Module	752C310-6
10	Parts List, Amp/Volt Module	Table 7-1
11	Parts List, Zero Adjust Assy.	Table 7-2
12	Accessory Kit, S-22907 Recorder	804A902
13	Accessory Kit, S-22906 Recorder	804A903

DWG NO 804D10E SH 1 REV

REVISIONS			
ZONE	REV	DESCRIPTION	DATE	APPROVED
		SEE SHT 2		

4	4	43302-10	#4 x 1/2 PAN SLT TYPE 'B' SCREW	85	N
1	1	FAG2-.25	FUSE .25A 230V OPERATION	84	L M
1	1	FAG2-.5	FUSE .5A 115V OPERATION	83	L M
1	1	752A648-3	LABEL "C"	82	L
1	1	752A648-2	LABEL "B"	81	L
1	1	752A648-1	LABEL "A"	80	L

NOTES:

1. ASSEMBLE ITEMS #1, 27, 28 & 29 FIRST (SEE DET. A). ADHERE ITEMS #27, 28 & 29 TO ITEM #1 USING ITEM #70 SPARINGLY. HOLES IN ITEMS #27, 28 & 29 ARE TO BE CONCENTRIC WITH HOLES PROVIDED IN ITEM #1.
2. CODING DOT (ITEM #71, 72 & 73) COLOR TO MATCH CHANNEL COLOR. USE ONE CODING DOT PER AMPLIFIER. SEE VIEW E-E.
3. FOR WIRING DIAGRAM SEE 804D10 SHT 2.
4. ESTERLINE ANGUS POWER 50 HZ MODEL NO. 804D10-50 — 77 SHOWN
5. FOR ALARM SEE 804D328-□

1	1	804A658	LABEL-S22906-1	79	F
6	6	HX38017	SCREW #6-32 x 1/4 PAN HD	78	L
1	1	804A654	LABEL (SEE FY NOTE #4)	77	
1	—	723A3	PULLEY	76	L
.5 FT	.5 FT	0259	#17 YELLOW TUBING	75	O
1	1	01670	COLOR DOT-1/2 DIA-B	73	
1	1	01669	COLOR DOT-1/4 DIA-RE	72	

QTY. REQ'D -50	QTY. REQ'D. -60

1	1	01668	COLOR DOT-1/4 DIA.-BLACK	NOTE 2.	71
A/R	A/R	01301	ADHESIVE-LOCKTITE 404		70
4	4	1HN6-8	NUT-#8-32 HEX		69
4	4	SP1908	L.WASHER-#8 INT. TOOTH		68
.8 FT	.8 FT	ND40042-32	WIRE-22 GA. WE/BE-9 1/2 LG		67
1.7 FT	1.7 FT	ND40042-54	WIRE-22 GA.-BE-20 LG.	SEE SHT 2	66
.8 FT	.8 FT	ND40042-35	WIRE-22 GA.-WE/BK-9 1/2 LG.	"	65
1.9 FT	1.9 FT	ND40042-17	WIRE-22 GA.-BK-22 1/4 LG	"	64
2.4 FT	2.4 FT	ND40042-36	WIRE-22 GA.-RD-28 1/2 LG	"	63
1.0 FT	1.0 FT	ND40042-41	WIRE-22 GA.-WE/RD-12 LG.	SEE SHT 2	62
[illegible]	3.0	[illegible]	WIRE-18 GA.-WE/GY-11 3/4 LG (RT 3)	"	61
1.0 FT	1.0 FT	[illegible]	WIRE-18 GA.-WE/BE-11 LG.	"	60
.9 FT	.9 FT	[illegible]	WIRE-18 GA.-WE/BK-10 LG	"	59
1.0 FT	1.0 FT	[illegible]	WIRE-18 GA.-WE/RD-11 LG.	"	58
1.1 FT	1.1 FT	01645	WIRE-14 GA.-GN.-13 LG.	SEE SHT 2	57
[illegible]	.8 FT	0588	WIRE-18 GA.-GY-11 LG. (RT 3)	"	56
9	9	KPC-21F	TERMINAL CONNECTOR		55
1.0 FT	1.0 FT	0759	WIRE-18 GA.-BE-11 LG.		54
.9 FT	.9 FT	[illegible]	WIRE-18 GA.-OE-9 3/4 LG.		53
.9 FT	.9 FT	[illegible]	WIRE-18 GA.-RD-10 1/2 LG.	SEE SHT 2	52
1.5 FT	1.5 FT	0704	HEAT SHRINK TUBE		51
3	3	16800403-201	RESISTOR 1K 1/10W .1%		50
12	12	TEL-71	CRIMP TYPE TERMINAL LUG	SEE SHT 2	49
1	1	804A630	DANGER LABEL		48
3	3	73A50-2	FLAT CABLE		47
A/R	A/R	01637	LOCTITE '242'		46
3	3	804A513	JUMPER		45
7	7	HX38018	SCR.-#6-32 x 5/16 PAN HD. M.S.		44
2	2	43141	NUT-#4-40		43
13	13	NX2006	NUT-#6-32		42
2	2	SP1902	L.WASHER-#2 INT. TOOTH		41
2	2	NX2002	NUT-#2-56 HEX		40
16	16	SP1904	L.WASHER-#4 INT TOOTH		39
4	4	NX91104	SCR.-#10-32 x 1/4 END HD. M.S.		38
14	14	HX38002	SCR.-#4-40 x 1/4 PAN HD. M.S.		37
27	27	SP1906	L.WASHER #4 INT TOOTH		36
6	6	NX90610	SCR.-#6-32 x 5/8 BIND. HD. M.S.		35
4	14	HX38001	SCR.-#6-32 x 1/2 PAN HD. M.S.		34
2	2	ND40036-2	GROUND LUG		33
4	4	HX38034	SCR.-#8-32 x 1/4 PAN HD. M.S.		32
2	2	804A619	SPACER-1/8 THK x 5/8 DIA.		31
2	2	804A628	SPACER-3/16 THK x 3/8 DIA.		30
10	10	804A620	SPACER-3/16 THK x 1 DIA.		29
1	1	797A402-20	WIRE ASS'Y.		28
1	1	804A632	SCALE		27
1	1	804A614	MAGNET		26
2	2	804A605	MAGNET PLATE		25
3	3	KMC-55	JONES CONNECTOR		24
1	1	804C401-1	TERMINAL BLOCK-3 TERM-300V		23
1	1	804C401-2	TERMINAL BLOCK-4 TERM-300V		22
1	1	804C400-2	TERMINAL BLOCK-10 TERM-600V		21
	1	14355	PLASTIC CAP		20
1	1	14358	FUSE HOLDER		19
1	1	190169-5	BAIL-12" LONG		18
2	2	45024	FOOT (REAR)		17
1	1	190169-2	FOOT (RIGHT)		16
1	1	190169-1	FOOT (LEFT)		15
1	1	43073	STRAIN RELIEF		14
1	1	8935-6	POWER CORD		13
1	1	752C539	TRANSFORMER ASS'Y		12
1	1	804B601	SERVO P.D MTG BRACKET (SHEILDED)		11
4	4	752B682	SERVO P.D MTG BRACKET		10
1	1	[illegible]	REAR TERMINAL COVER		9
3	3	752C306-8	SERVO AMP P.C.B. ASS'Y		8
3	3	804D101	AMP/VOLT MODULE		7
1		752C107-1A	CHART DRIVE MODULE		6
1	1	804C500-1	CASE ASS'Y		5
1	1	KIT 3P8	RECORDER CHASSIS 804D100-□		4
1	1	804D506	BASE PAN ASS'Y		3

QTY. REQ'D -50	QTY. REQ'D. -60	DATA SHEET ITEM	PART NO	DESCRIPTION	REMARKS	ITEM NO

PARTS LIST

MATERIAL	DN R.E. ADAMS	DATE 11-14-60	ESTERLINE ANGUS INSTRUMENT CORP INDIANAPOLIS, IND U.S.A.
EA MAT'L NO	CH		
	AP		FINAL ASS'Y — MINISERVO AMP THREE PHASE A.C.
FOR ACCESSORY KIT SEE 804A-A-A-J	UNLESS OTHERWISE SPECIFIED DIMENSIONS ARE IN INCHES TOLERANCES ANGLES ± FRACTIONS ± DECIMALS ± REMOVE BURRS AND SHARP EDGES		SIZE D FSCM NO 72264 DWG NO 804D10
FINISH			SCALE HALF RELEASED 6-4-62 SHEET 1
NEXT ASSY	USED ON		
APPLICATION			

DWG. NO. 804D10 2

ECN	REV	DESCRIPTION	DATE
C2973	L	REVISED ALL HARDWARE & ADDED ITEM 2 KIT 3PS NUMBER	3-11-83
C3041	M	ADDED IT.83 FUSE (QTY 1) ON -50, ADDED IT.84 FUSE (QTY 1) ON -60	[illegible]
C3412	N	IT.34 WAS QTY 6, IT.39 WAS (QTY 2), ADDED IT.85 [illegible]	[illegible]
C3526	O	REMOVED ITEM [illegible]	[illegible]
12759	P	IT.4 WAS 752C107-1	[illegible]

REVISIONS

ZONE	REV	DESCRIPTION	DATE	ECN
	A	SEE ECN LNS	1-8-81	10765
	B	ADDED [illegible]	[illegible]	[illegible]
	C	ITEM #31 CHANGED TO SPECIAL SCREW; PART NO. WAS NX90603	1-22-81	10783
	D	CHANGED SCREW ITEM #35 FROM [illegible] CHANGED [illegible] WIRES TO NO NOS. ADDED REVISION DETAIL P SHT 1	2-26-81	C2048
	E	SEE ECN	1-26-81	10838
	F	ADDED IT 19 & PARTIAL FRONT VIEW CASE	3-10-81	10872
	G	IT 57 WAS [illegible]	3-20-81	10885
	H	[illegible] IT 31 804A039 (6)	18 MAY 81	10954
	J	[illegible]	1-8-82	[illegible]
	K	ADDED IT.31 GROUND LUG, IT.36 WASHER WAS QTY 26	9-28-82	C2798

FOR REVISIONS SEE LEFT OF PAGE

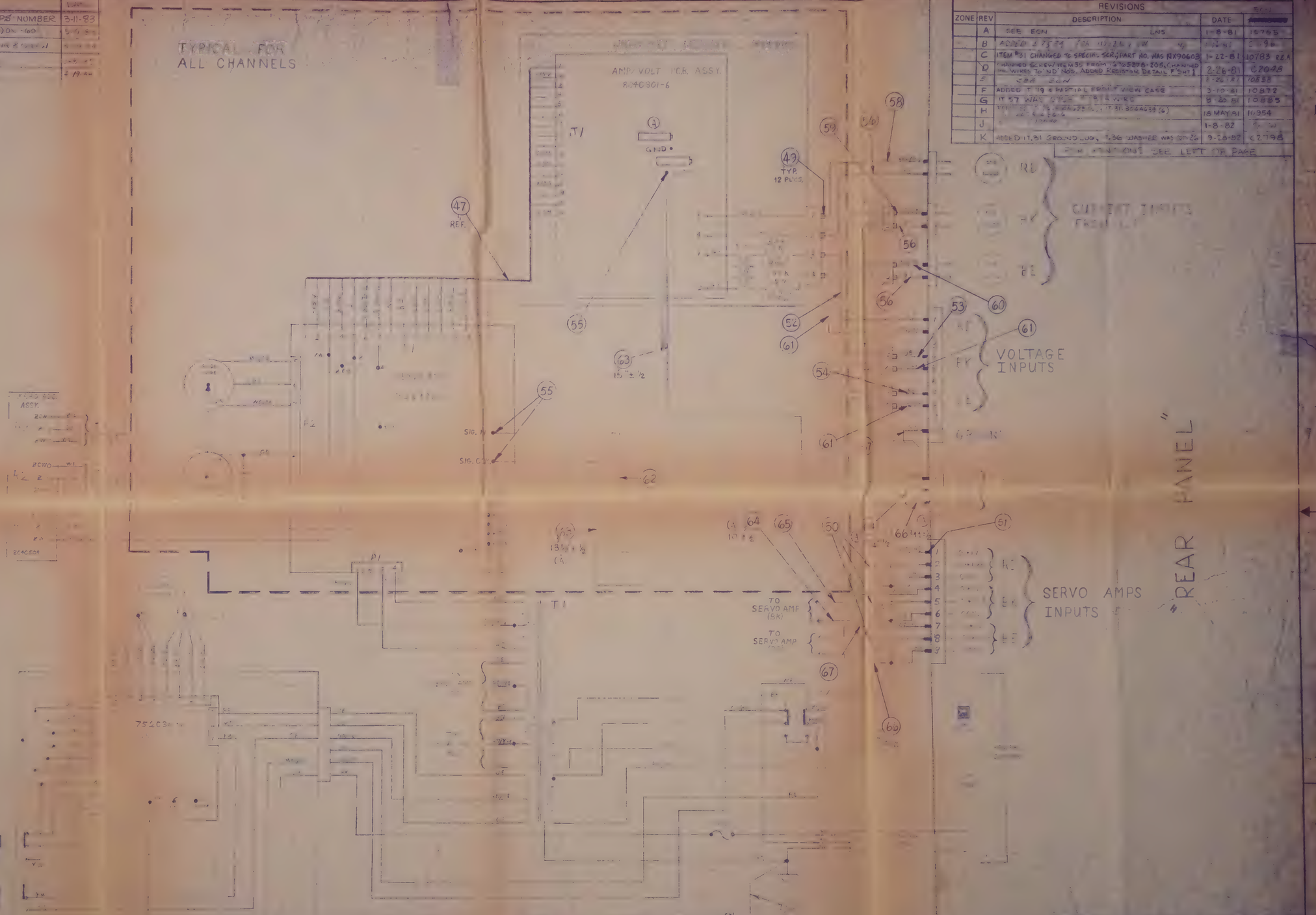

QTY HEAD	DATA SHEET ITEM	PART NO	DESCRIPTION	REMARKS

PARTS LIST

MATERIAL

FINISH

UNLESS OTHERWISE SPECIFIED DIMENSIONS ARE IN INCHES
TOLERANCES
ANGLES
FRACTIONS
DECIMALS
REMOVE BURRS AND SHARP EDGES

DR. [illegible] DATE
CH
AP

ESTERLINE ANGUS INSTRUMENT CORP.
INDIANAPOLIS, INDIANA, U.S.A.

WIRING DIAGRAM - MINISERVO AMP/VOLT
POWER SUPPLY DEMAND RECORDER

SIZE D | FSCM NO 72264 | DWG NO 804D10

SCALE | RELEASED EFF | SHEET

BADGER SOLD
SEC
NEXT ASSY | USED ON
APPLICATION

DWG. NO 804D11 SH 2 REV

ZONE	REV	DESCRIPTION	DATE	ECN
—	M	ITEM 23 SCREW #6-32 x 3/8 BIND HD. SCREW # NX90610 WAS 6-32 x 5/8 BIND HD. SCREW # NX90616. ITEM 0 ACC. KIT 804A902-D.	2-8-83	C2934
—	N	ITEM 29 WASHER SP1906 QTY 3 WAS QTY 2. REMOVED ITEM 42 #6-32 x 5/16 PAN HD SCREW HX38006 QTY 1. ITEM 36 QTY 5 WAS QTY 4.	3-8-83	C2968
—	P	ADDED ITEM 61 FUSE FAG2-.5 QTY 1 ON -50 ONLY ADDED ITEM 62 FUSE FAG2-.25 QTY 1 ON -60 ONLY	5-19-83	C3043
—	Q	IT. 4 WAS 752C107-1	4-19-83	12759

REVISIONS

ZONE	REV	DESCRIPTION	DATE	ECN
	A	ADDED BUNDLE PICT & NOTE SEE ECO 4-45	1-9-81	10767
	B	ITEM #27 CHANGED TO SPECIAL SCR., PART NO. WAS NX90603.	1-22-81	10783 REA
	C	CHANGED SCREW ITEM 53 FROM 10768278-258 CHANGED WIRES TO NO. NOS. ADDED RESISTOR DETAIL G-G	2-26-81	C2047
	D	SEE ECO	2-26-81	10859
	E	ADDED IT. 60 & PARTIAL FRONT VIEW.	3-10-81	10905
	F	IT. 48 WAS 0754 #18-24 WIRE	3-20-81	10986
	G	CHANGED (ITEM 24) HEX NUT WAS (QTY 7)	5-8-81	C2146
	H	CHG. IT. 6 WAS 804A604-3, REMOVED ITEM IT. 18 FAG2-.25, IT. 25 WAS 0704	5-8-81	10956
	J	[illegible]	1-8-82	[illegible]
	K	IT. 25 WASHER WAS QTY 11, IT. 26 SCREW WAS QTY 2, IT. 31 GROUND LUG WAS QTY 1	9-28-82	C2798
	L	REVISED ALL HARDWARE AND ADDED KIT TIPS ITEM 2	1-27-83	C2917

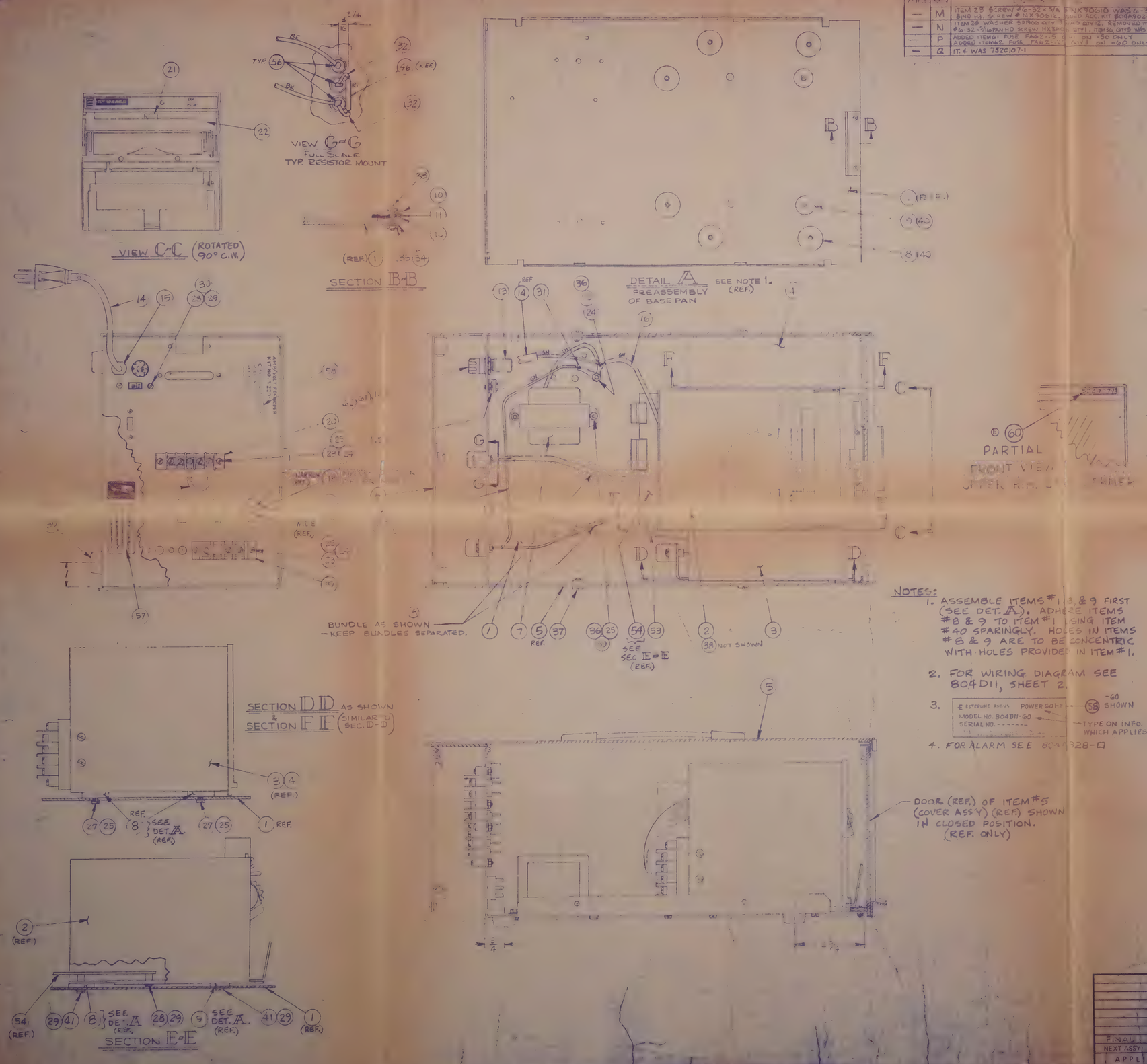

NOTES:

1. ASSEMBLE ITEMS #1, 3, & 9 FIRST (SEE DET. A). ADHERE ITEMS #8 & 9 TO ITEM #1 USING ITEM #40 SPARINGLY. HOLES IN ITEMS #8 & 9 ARE TO BE CONCENTRIC WITH HOLES PROVIDED IN ITEM #1.
2. FOR WIRING DIAGRAM SEE 804D11, SHEET 2.
3. ESTERLINE ANGUS POWER GOVE —58 -60 SHOWN
   MODEL NO. 804D11-60 —TYPE ON INFO. WHICH APPLIES.
   SERIAL NO. - - - - - -
4. FOR ALARM SEE 804[illegible]328-D

QTY. REQ'D -50	QTY. REQ'D -60	DATA SHEET ITEM	PART NO	DESCRIPTION	REMARKS	ITEM NO
1	1		FAG2-.25	FUSE .25 AMP FOR 230V OPERATION		62
1	1		FAG2-.5	FUSE .5 AMP FOR 115V OPERATION		61
1	1		804A653	LABEL - STK. INJTJC - S22307-1		60
A/R	A/R		01637	LOCTITE '242'		59
1	1		[illegible]	LABEL (SEE EX. NOTE 3)		58
1	1		804A630	DANGER LABEL		57
1.5 FT	1.5 FT		0704	SHRINK TUBING 3/16 DIA. - BK	SEE SHT 2	56
4	4		TEL71	TERMINAL LUG	SEE SHT 2	55
	1		752C306-8	SERVO AMP P.C.B. ASS'Y		54
	1		73A50-9	FLAT CABLE		53
.80 FT	.80 FT		0592	WIRE - 18 GA. - WE/BK 9" LG.	SEE SHT 2	52
.80 FT	.80 FT		0593	WIRE - 18 GA. - WE/RD 9" LG.	SEE SHT 2	51
.80 FT	.80 FT		0595	WIRE - 18 GA. - RD 9" LG.	SEE SHT 2	50
.80 FT	.80 FT		0588	WIRE - 18 GA - GY 9" LG.	SEE SHT 2	49
1.0 FT	1.0 FT		01645	WIRE - 14 GA. - GN 12" LG	SEE SHT 2	48
1.0 FT	1.0 FT		ND40042-32	WIRE - 22 GA. - WE/BE 12" LG	SEE SHT 2	47
	1		16800403-201	RES. - 1K - 1/10 W. 1%	SEE SHT 2	46
1.0 FT	1.0 FT		ND40042-17	WIRE - 22 GA. - BK 12" LG	SEE SHT 2	45
1.0 FT	1.0 FT		ND40042-54	WIRE - 22 GA. - BE 11" LG	SEE SHT 2	44
3	3		KPC 21F	CONNECTOR	SEE SHT 2	43
1	1		804A513	JUMPER WIRE ASS'Y		42
4	4		HX38005	SCR. - #4-40 x 3/16 PAN HD. M.S.		41
A/R	A/R		01301	ADHESIVE - LOCKTITE 404	DET. A	40
4	4		723A54	FEET - RUBBER - SELF ADHERING		39
1	—		[illegible]	[illegible]		38
4	4		NX91104	SCR. - #10-32 x 1/4 BIND. HD. M.S.		37
5	5		HX38017	SCR. - #6-32 x 1/4 PAN HD. M.S.		36
	2		NX2002	NUT - #2-56 HEX		35
	4		SP1902	L.WASHER - #2		34
	2		[illegible]	SCR. - #2-56 x 1/4 PAN HD. M.S.		33
[illegible]	[illegible]		0259	#14 YELLOW TUBING 3/[illegible]		32
2	2		ND40036-2	GROUND LUG		31
2	2		43141	NUT - #4 HEX		30
3	8		SP1904	L.WASHER - #4		29
4	4		HX38002	SCR. - #4-40 x 1/4 PAN HD. M.S.		28
4	4		HX38021	SCR. - #6-32 x [illegible] PAN [illegible]		27
						26
13	13		SP1906	L.WASHER - #6		25
7	7		NX2006	NUT #6-32 HEX		24
4	4		NX90610	SCR. - #6-32 x 5/8 BIND. HD. M.S.		23
1	1		723A55-6	SCALE		22
1	1		(REF.)	PEN		21
1	1		804A403	TERMINAL STRIP		20
1	1		804C400-1	TERMINAL BLOCK - 600V - "JELLY BEAN"		19
1	1		KMC55	JONES CONNECTOR		18
			57534	SWITCH 115/230 V		17
			[illegible]	[illegible]		16
1	1		43073	STRAIN RELIEF GROMMET 1/2" O.D.		15
1	1		89356	POWER CORD		14
1	1		14355	PLASTIC CAP		13
1	1		14358	FUSE HOLDER		12
1	1		804A614	MAGNET		11
2	2		804A605	MAGNET PLATE		10
2	2		804A610	SPACER (1/8 x 5/8 DIA.)	DET. A	9
6	6		804A620	SPACER (3/16 x 1 DIA.)	DET. A	8
1	1		752B536-2	TRANSFORMER		7
1	1		804B518	REAR TERMINAL COVER		6
1	1		804C500-2	COVER & DOOR ASS'Y		5
1	1		752C107-1A	CHART DRIVE MODULE		4
1	1		804D101	AMP/VOLT MODULE		3
1	1		KIT1PE	RECORDER CHASSIS 804D102-D		2
1	1		804D507	BASE PAN SUB ASS'Y	DET. A	1

PARTS LIST

APPLICATION	
FINAL	BUILT ON (CODE)
NEXT ASSY	USED ON

MATERIAL

EA MAT'L NO

FOR ACCESSORY KIT SEE # 804A902-D

DR. R.E. ADAMS DATE 11-19-80

CH.

AP.

UNLESS OTHERWISE SPECIFIED DIMENSIONS ARE IN INCHES. TOLERANCES ANGLES ± FRACTIONS ± 1/32 DECIMALS ± .005 REMOVE BURRS AND SHARP EDGES

ESTERLINE ANGUS INSTRUMENT CORP. INDIANAPOLIS, IND. U.S.A.

FINAL ASS'Y — MINISERVO AMP/VOLT SINGLE PEN A.C.

SIZE D ASCM NO 72264 DWG. NO 804D11

SCALE 1/2 F RELEASED [illegible] SHEET 1 OF 2

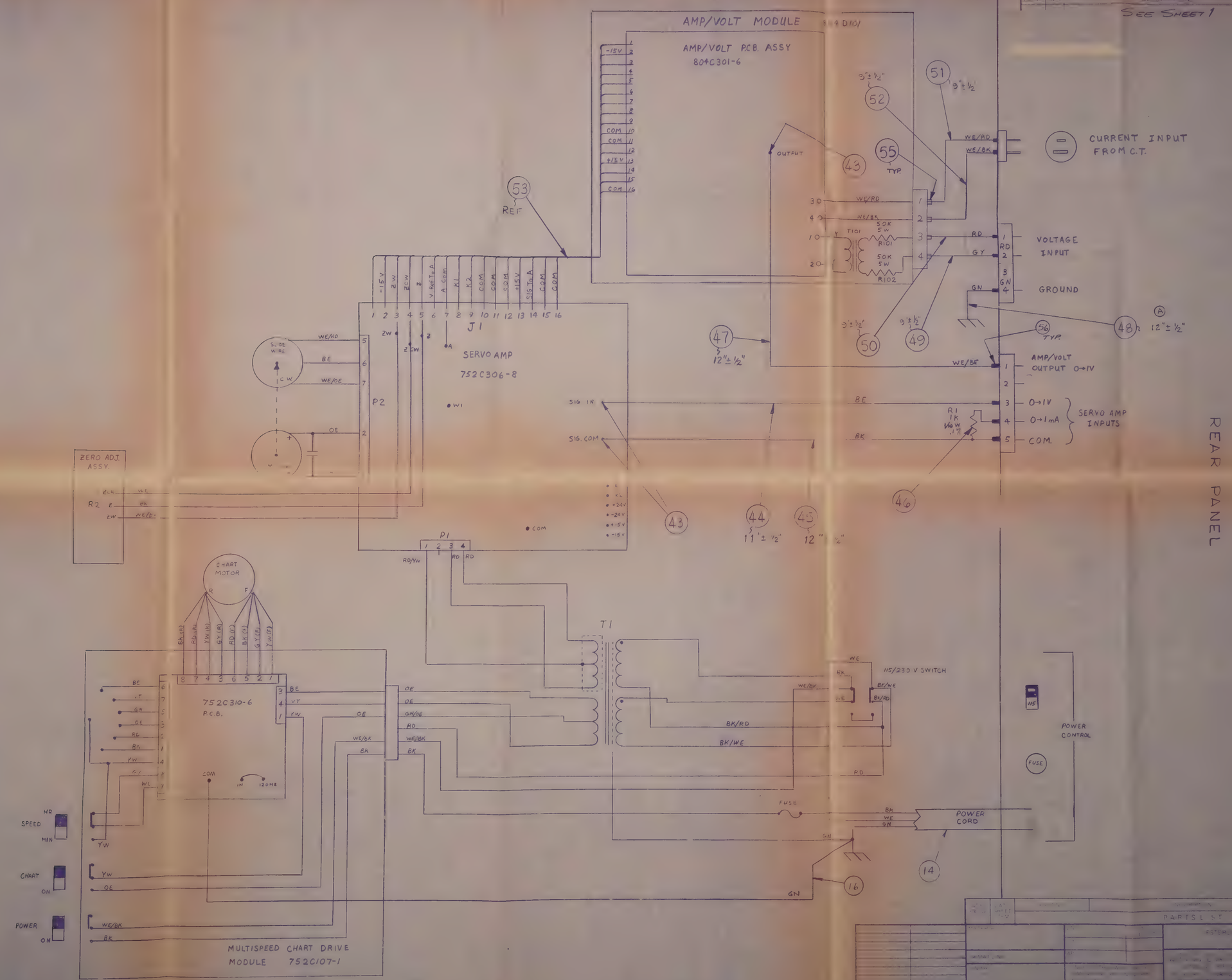
AMP/VOLT MODULE
AMP/VOLT P.C.B. ASSY
804C301-6
SEE SHEET 1
CURRENT INPUT FROM C.T.
VOLTAGE INPUT
GROUND
AMP/VOLT OUTPUT 0→1V
SERVO AMP INPUTS
0→1V
0→1mA
COM.
SERVO AMP
752C306-8
J1
P2
P1
ZERO ADJ. ASSY.
CHART MOTOR
752C310-6 P.C.B.
MULTISPEED CHART DRIVE MODULE 752C107-1
SPEED
CHART
POWER
115/230 V SWITCH
POWER CONTROL
FUSE
POWER CORD
T1
REAR PANEL
PARTS LIST
D 72264

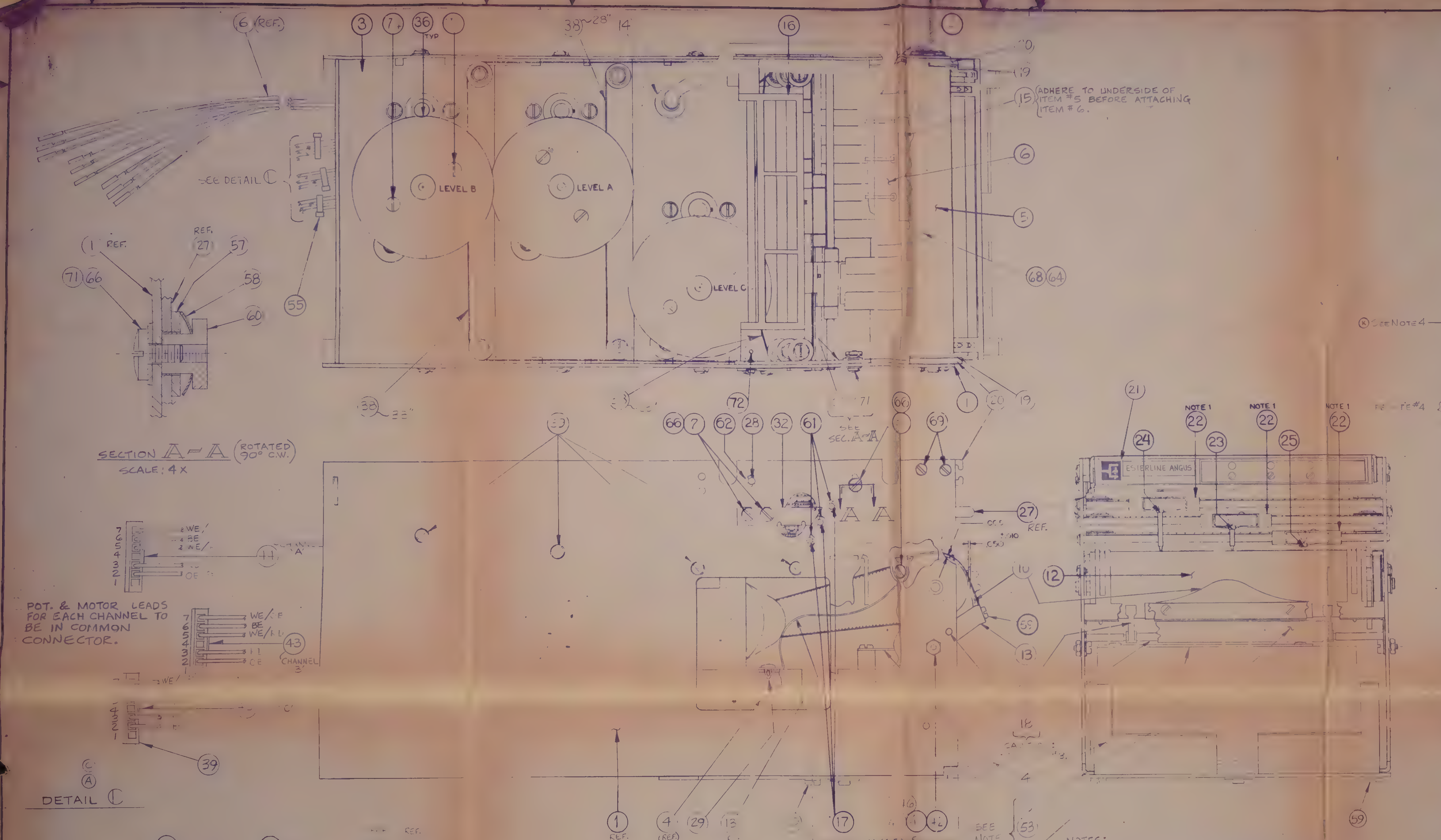

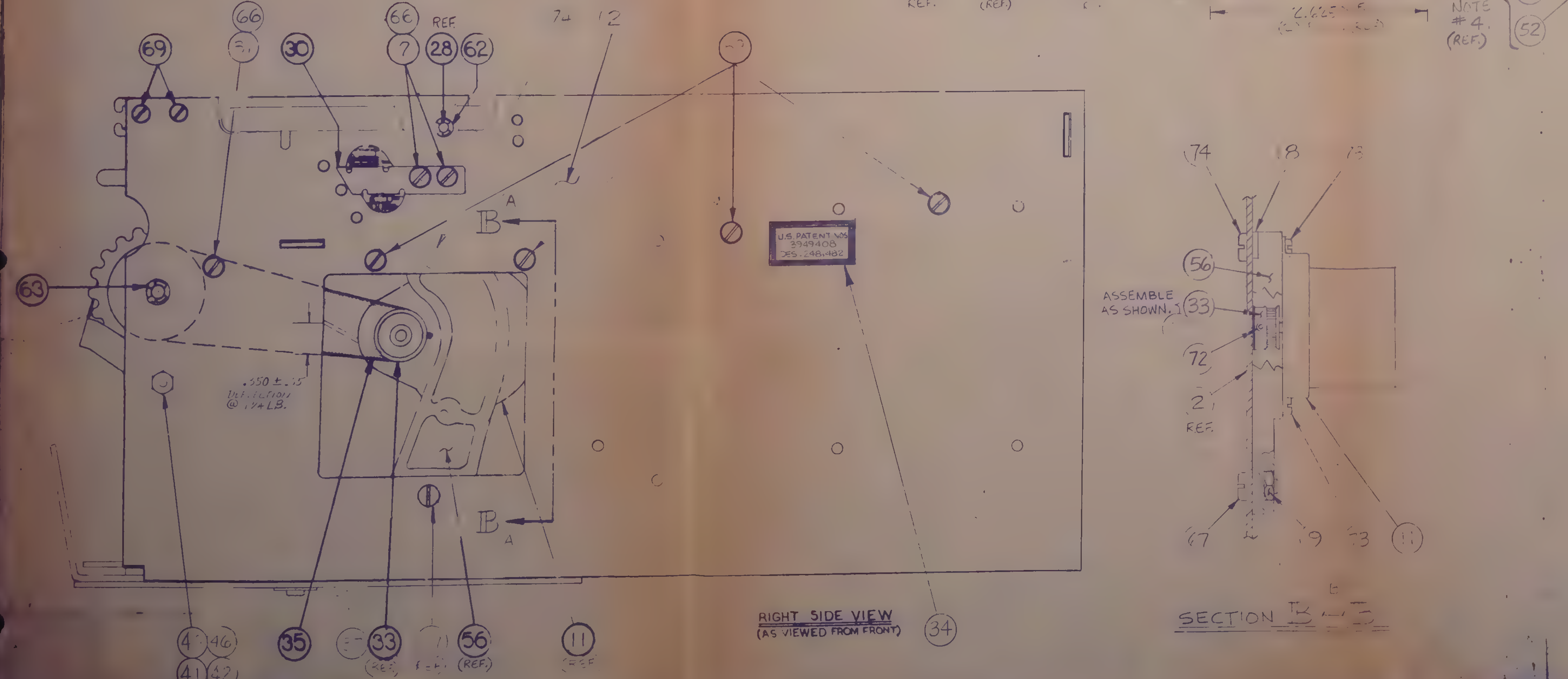

NOTES:

1. APPLY GLYPTOL TO STRING FASTENING SCREW ON CARTRIDGE HOLDER.
2.
3. ITEM# 18 (SUPPORT ROD) IS NOT SYMMETRICAL. SHORT END MUST BE INSERTED INTO L.H. SIDE PLATE (ITEM# 1).

(A) 4. ITEMS #52, 53, & 59 ARE TO BE ASSEMBLED AS PER INFORMATION DWG. NO. 723C19 BUT PARTS ARE NOT TO BE ORDERED FROM PARTS LIST OF THAT DWG.

THIS DWG. SIMILAR TO 752D125-□.

ECN	LET	CHANGE	DATE
C3268	L	ITEM 70 WAS 16TG5278-1 IS ITEM 70 SP1902 WAS REMOVED	
C3251	K	[illegible] HARDWARE [illegible]	
C3047	J	[illegible]	
C3030	H	REVISED HARDWARE	
C2894	G	ADDED [illegible]	
C2518	F	ITEM 29 WAS [illegible]	
[illegible]	E	[illegible] REMOVED [illegible]	
	D		
	C		
	B		
10733	A	[illegible] 53 [illegible]	

		DESCRIPTION	PART NUMBER	FIND OR ITEM NO.	
				80	
				79	
				78	
				77	
				76	
				75	
[illegible]	[illegible]	SCREW #8-32 x 3/8 PAN H THD.CUT.	43106-4	74	(E)
	2	SCREW #4 x 5/16 PAN. H. THD. FORMING	43302-2	73	
2	2	SET SCREW #4-40 x 3/16 LG.	ND40219-4	72	(B)(H)
	1	BINDING HEAD SCREW #4-40 x 5/16 LG	[illegible]	71	(H)
				70	
4	4	BIND. HEAD SCREW #2-56 x 1/4 LG	NX90204	69	(B)(G)(H)(L)
2	2	SCR.-#6-32 x 3/16 LG BIND HD.M.	NX90603	68	(B)
1	1	BINDING HEAD SCREW #8-32 x 3/8 LG	HX38034	67	
6	6	LOCKWASHER #4	SP1904	66	(E)
				65	(E)
	2	LOCKW.-#6 INT. TOOTH	SP1906	64	
1	1	"E" RETAINING RING	43006	63	
[illegible]	2	"E" RETAINING RING	43008	62	
3	3	BOWED "E" RETAINING RING	ND40143-1	61	
1	1	HAT WASHER	723A57	60	
14	14	SCREW #4 x 3/16 THD FORMING	43302-1	59	(B)(E)(H)
	1	SPRING WASHER	723A58	58	
1	1	FLAT WASHER	723A56	57	
1	1	MOTOR MTG BRACKET	723C11	56	
[illegible]	[illegible]	STRAP-CABLE	43138-4	55	(H)
				54	(A)(H)
	1	PLATE - CHART ACCUMULATION	[illegible]	53	(A)
	1	GUIDE	723B122	52	(A)
				51	
				50	
				49	
				48	
				47	
A/R	A/R	[illegible]TITE '242'	01637	46	(H)
1	1	DOT BLUE	01670	45	(H)
1	1	DOT RED	01669	44	(H)
1	1	DOT BLACK	01668	43	(H)
2	2	[illegible]	[illegible]	42	(B)
2	2	[illegible] #4	HX16330	41	(B)
2	2	[illegible]	[illegible]	40	(B)
3	3	CONNECTOR BODY	[illegible]-3C	39	(A)
2.3FT.	2.3FT.	SERVO STRING	[illegible]	38	(H)
1		[illegible]	[illegible]	37	
[illegible]	3	180 TOOTH GEAR	723B79P	36	
[illegible]	1	TIMING BELT	70A199-3	35	
		[illegible]	[illegible]-48	34	(H)
	1	MOTOR PULLEY 60 HZ	723A2	33	
	1	PULLEY MTG BRACKET ASSY LEVEL A,B	752A503-2	32	
			[illegible]HS	31	
1	1	PULLEY MTG BRACKET ASSY LEVEL A,B	752A502-2	30	(E)
2	2	PLUG BUTTON	723A172	29	(F)
	1	PEN LIFT ROD	752A624	28	
1	1	PEN LIFT ARM	752B542	27	
2	2	CHART STRIPPER	723B102	26	
REF	REF	INK CARTRIDGE - BLUE LEVEL C	752A900-1	25	(H)
REF	REF	INK CARTRIDGE - BLACK LEVEL B	752A900-3	24	(H)
[illegible]	REF	INK CARTRIDGE - RED LEVEL A	752A900-2	23	(H)
[illegible]	3	CARTRIDGE HOLDER ASSY	752B507	22	
	1	LOGO	804A222	21	
	2	CLIP, SCALE MOUNTING	723B35	20	
	2	SHIM	752A630	19	
	1	SUPPORT ROD	[illegible]	18	
[illegible]	3	GUIDE ROD	723A22	17	
	1	PEN LIFT	752B618	16	
	1 PC.	TAPE - 1" WIDE ADHES. BACK. CUT 2" LENGTH FROM ROLL	C1557	15	
[illegible]	1	GROMMET	[illegible]-2	14	(E)
[illegible]	1	CHART HOLD DOWN & CHUTE ASS'Y	723A85-1	13	
	1	TIMING ROLL ASSEMBLY	723B24	12	
[illegible]	1	[illegible] (...TI SP)	[illegible]	11	
1	1	[illegible]	[illegible]	10	
	1	NUT-HEX 8-32	1HN8-8	9	
	1	WASHER	723A15	8	
[illegible]	4	SCREW #4-40 x 1/8 LONG	ND40[illegible]-59	7	(E)(H)
1	1	ZERO POT ASS'Y	[illegible]	6	
	1	ZERO POT. MTG. BRKT ASSY.	[illegible]	5	
1	1	[illegible]	[illegible]	4	
1	1	TOP MOUNTING PLATE ASSY-LEVEL A,B&C	752C100-3	3	
1	1	[illegible]	[illegible]	2	
1	1	LEFT SIDE PLATE SUB-ASS'Y	752C532	1	

PARTS LIST

UNLESS OTHERWISE SPECIFIED DIMENSIONS ARE IN INCHES
TOLERANCES:
ANGLES ±
FRACTIONS ±
DECIMALS ±

REMOVE ALL BURRS AND SHARP EDGES. DIMENSIONS AND TOLERANCES SHALL BE HELD AFTER PLATING.

(KITERS)

(1) DATA SHEET ITEM

RELEASED-EPR

NO REQ	USED ON	STYLE NO
	804D21[illegible]	[illegible]
	804D22[illegible]	[illegible]
	804D18[illegible]	[illegible]
	804D17[illegible]	[illegible]
	804D14[illegible]	[illegible]
	[illegible]	
	804D10[illegible]	

CLASSIFICATION

ESTERLINE ANGUS DIVISION,
ESTERLINE CORP.
INDIANAPOLIS, IND. U.S.A.

NAME
3 PEN MINISERVO CHASSIS ASSY
LEFT HAND ZERO
P.S.D.R. (KITERS)

DR
CK
AP
SCALE FULL
DATE
[illegible]4D1[illegible]

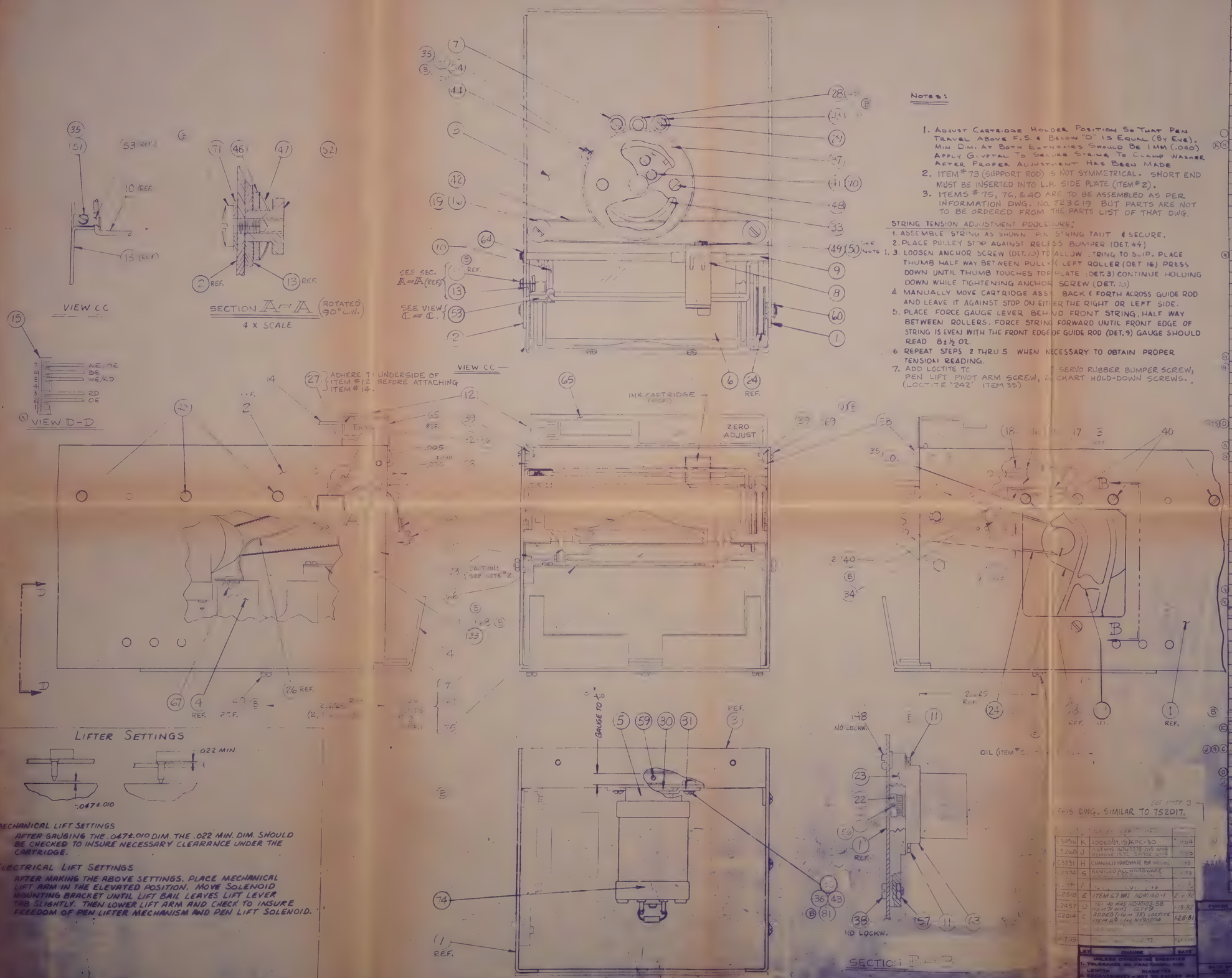

NOTES:

1. ADJUST CARTRIDGE HOLDER POSITION SO THAT PEN TRAVEL ABOVE F.S. & BELOW "O" IS EQUAL (BY EYE). MIN DIM. AT BOTH EXTREMES SHOULD BE 1 MM (.040). APPLY GLYPTAL TO SECURE STRING TO CLAMP WASHER AFTER PROPER ADJUSTMENT HAS BEEN MADE
2. ITEM #73 (SUPPORT ROD) IS NOT SYMMETRICAL. SHORT END MUST BE INSERTED INTO L.H. SIDE PLATE (ITEM #2).
3. ITEMS #75, 76, & 40 ARE TO BE ASSEMBLED AS PER INFORMATION DWG. NO. 723C19 BUT PARTS ARE NOT TO BE ORDERED FROM THE PARTS LIST OF THAT DWG.

STRING TENSION ADJUSTMENT PROCEDURE:

1. ASSEMBLE STRING AS SHOWN. PUL STRING TAUT & SECURE.
2. PLACE PULLEY STOP AGAINST RECESS BUMPER (DET. 44)
3. LOOSEN ANCHOR SCREW (DET. 70) TO ALLOW STRING TO SLIP. PLACE THUMB HALF WAY BETWEEN PULLY & LEFT ROLLER (DET 16) PRESS DOWN UNTIL THUMB TOUCHES TOP PLATE (DET. 3) CONTINUE HOLDING DOWN WHILE TIGHTENING ANCHOR SCREW (DET. 70)
4. MANUALLY MOVE CARTRIDGE ASSY. BACK & FORTH ACROSS GUIDE ROD AND LEAVE IT AGAINST STOP ON EITHER THE RIGHT OR LEFT SIDE.
5. PLACE FORCE GAUGE LEVER BEHIND FRONT STRING, HALF WAY BETWEEN ROLLERS. FORCE STRING FORWARD UNTIL FRONT EDGE OF STRING IS EVEN WITH THE FRONT EDGE OF GUIDE ROD (DET. 9) GAUGE SHOULD READ 8±½ OZ.
6. REPEAT STEPS 2 THRU 5 WHEN NECESSARY TO OBTAIN PROPER TENSION READING.
7. ADD LOCTITE TO PEN LIFT PIVOT ARM SCREW, SERVO RUBBER BUMPER SCREW, & CHART HOLD-DOWN SCREWS. (LOCTITE '242' ITEM 35)

QUANTITY						-1	PART NO.	DESCRIPTION	
					1	1	752B527	SIDE PLATE SUB-ASS'Y (R.H.)	1
					1	1	752B528	SIDE PLATE SUB-ASS'Y (L.H.)	2
						1	723B25	TOP MOUNTING PLATE ASS'Y.	3
						1	723C27	Z FOLD GUIDE & SCL [illegible]	4
						1	723A135	MOTOR ADAPTOR (PLASTIC)	5
						1	723B24	DRIVE ROLL SUB-ASS'Y.	6
						2	723A136	SHOULDER WASHER	7
						1	723A42	CARTRIDGE HOLDER ASS'Y.	8
						1	723A22	GUIDE ROD	9
						1	723A37	PEN LIFT BAIL	10
						2	433D2-2	SCR. — #4x5/16 PAT FORMING	11
						1	[illegible]	[illegible]	12
						1	723A32	MANUAL LIFT ARM	13
					1	1	804C300-7	ZERO POT ASS'Y — 1 PEN	14
						1	KPC 30	CONNECTOR BODY	15
						2	723A8	PULLEY	16
						2	723A16	SPACER	17
						2	ND40213-31	SCR. — #5-40 5/16 LONG	18
						2	723A16	BEARING	19
						2	ND40213-27	SCR. — #5-40 x 3/16 RH MACH.	20
					1	1	723A84	FOLDING WEDGE	21
							723A2	20 Hz PULLEY	22
					1	1	723C11	MOTOR BRACKET	23
						1	70A199-3	TIMING BELT	24
									25
						1	723A85	CHART HOLD DOWN & CHIPE [illegible]	26
						1 PC.	01557	TAPE — 1" ADHES. BACK [illegible]	27
						1	723A40	PINION ASS'Y.	28
						2	ND40213-34	SCR. — #6-32 x 5/8 LONG	29
						1	723BBB-2	POT. ASSY	30
						2	723A5	CLAMP	31
								SCR. — #6-32 3/16 LONG	32
						1	723B101	PULLEY	33
					1	1	723A168	[illegible]	34
					AR	AR	01627	[illegible] "242"	35
						7	SP1906	LOCKW. — #[illegible]	36
						1	723B79P	180 TOOTH GEAR	37
						1	HX38034	SCR. — #8-32 3/8 LONG	38
				2	2	2	752A630	SHIM	39
						14	433D2-1	SCR — [illegible]	40
						2	NX1004	FLATWASHER #4	41
						[illegible]	01523	SERVO STRING 23" LG.	42
						4	NX1006	WASHER	43
						1	69140	RECESS BUMPER	44
							[illegible]	[illegible]	45
						1	723A56	FLATNESS-EK	46
						1	723A58	SPRING WASHER	47
							43106-4	#8-32 x 3/8 PAN H TO CUT [illegible]	
							NX30202	SCR. — #2-56 1/8 LONG	48
						2	NY1002	FLAT WASHER [illegible]	49
					1	1	ND40203-69	SCR — #4-40 x 1/8 LONG	50
					1	1	723A57	HAT WASHER	51
					1	1	70A137	CLAMP	52
									53
									54
					1	1	1HNB-5	NUT — #8-32 HEX.	55
					2	2	723B32	[illegible] — SCALE MAT.	56
						2		SET SCREW	57
					1	1	43006	RETAINING RING	58
					1	1	NX2006	NUT #6-32 HEX.	59
									60
					1	1	752B109	[illegible] MOTOR [illegible]	61
					1	1	ND40143-1	BOWED 'E' RING	62
					1	1	2U4A[illegible]-9	[illegible]	63
					3	3	763B102	CHART STRIPPER	64
					2	2	723A192	PLUG BUTTON	65
					2	2	[illegible]	NUT — #4-40 HEX.	66
					4	4	[illegible]	SCR. — #2-56 [illegible]	67
						2		SCR. — #4-40 x [illegible]	68
					1	1	SP190	LOCKW. — #4 INT. TOOTH	69
									70
					1	1	723A137	SUPPORT ROD	71
					1	1	723A112-3	D.C. MOTOR ASSY	72
					1	1	723B122	GUIDE	73
							723A[illegible]	PLATE — CHART [illegible]	74
								[illegible]	75
								[illegible]	76
								[illegible]	77
								[illegible]	78
								[illegible]	79
								[illegible]	80
								[illegible]	81

THIS DWG. SIMILAR TO 752D17.

C5456	K	ADDED (17, 15) KPC-30		1-5-84
C2680	J	11-67 WAS 16N5278-105 QTY 6 REMOVE 17, 72 SP1902 QTY 6		[illegible]
C3231	H	CHANGED HARDWARE FOR WELDING		[illegible]
[illegible]	G	REVISED ALL HARDWARE		[illegible]
[illegible]	F	[illegible]		[illegible]
C2518	E	ITEM 67 WAS ND40160-1		2-1-82
C2457	D	TEM 40 WAS ND40103-58 ITEM 79 WAS Q2117 9		11-9-82
C2014	C	ADDED (ITEM 35) LOCTITE ITEM 69 Was NY1002		12-8-81
[illegible]		[illegible]		[illegible]

REV	CHANGE	DATE
	UNLESS OTHERWISE SPECIFIED 1. TOLERANCE ON FRACTIONAL DIM. LENGTH DIAMETER 2. CONCENTRICITY — NOT TO EXCEED 2½ THROUGH REJECTION 3. [illegible]	

FINISH

DATE OF ISSUE

KIT 1PS
REF ONLY

ASSEM. — NUMBER

EFF.

804D1N2

REVISIONS				
ECN	REV	DESCRIPTION	DATE	APPROVED
[illegible]	A	[illegible]	JAN [illegible] 81	
[illegible]	B	[illegible]	FEB 23 81	
[illegible]	C	[illegible]	[illegible] 81	

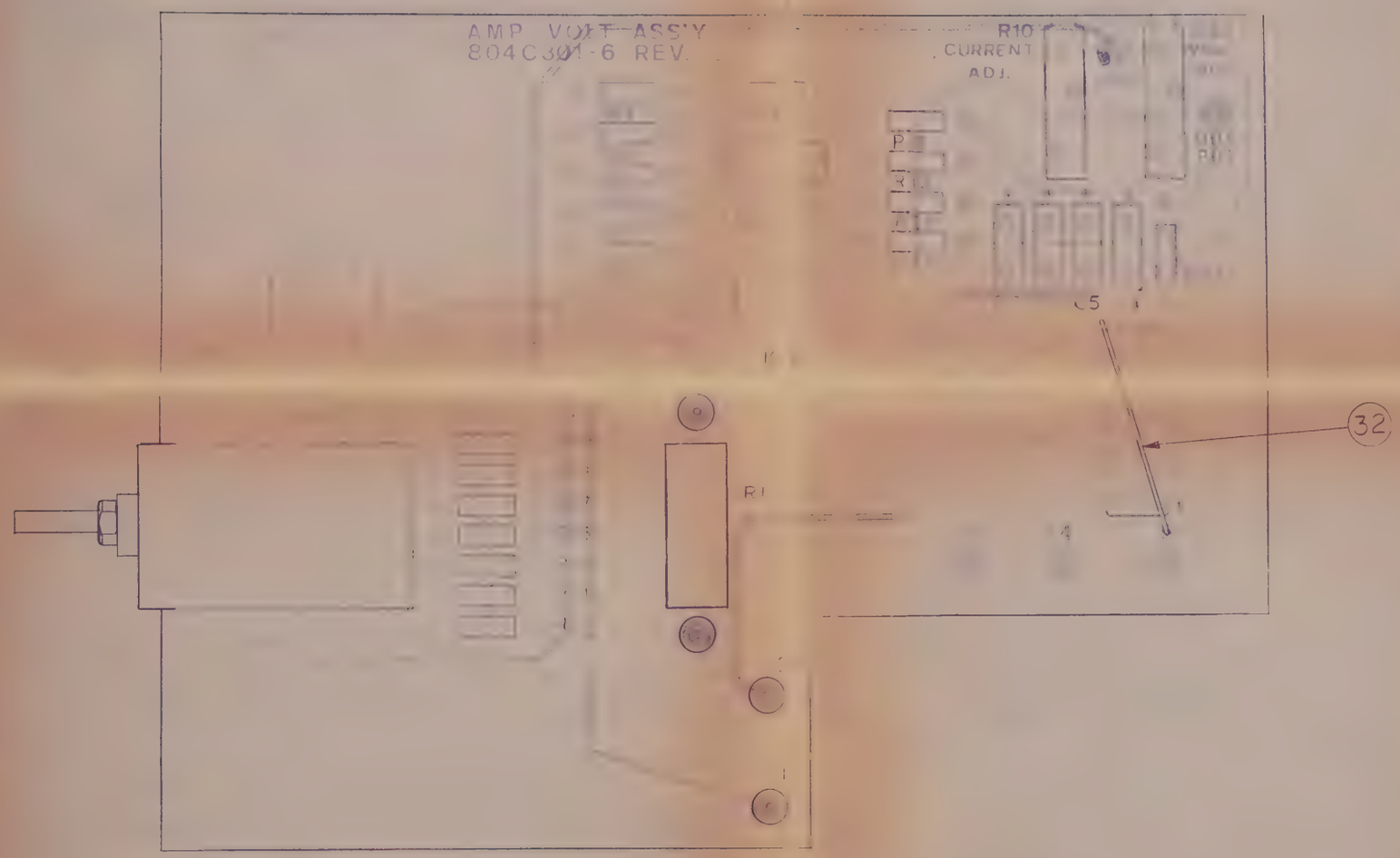

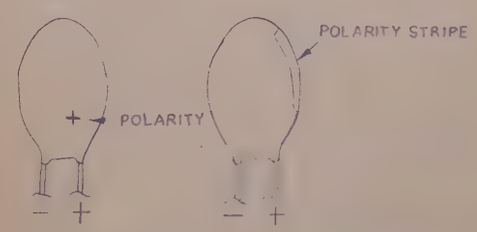

SOLID TANTALUM CAPACITOR
POLARITY MARKING SYSTEM

QTY REQD.	DATA SHEET ITEM	PART NO	DESCRIPTION	REMARKS	ITEM NO
					33
1		16755973-003	RUBBER TIE DOWN		32
1		PPC 33	POT 100Ω	R23	31
1		PPC 25	POT 500Ω	R10	30
1		RMF 32-10008	RESISTOR 100Ω .25% 8W	R24	29
2		RMF 32-50008	" 50Ω .25% 1/8W	R9 20	27
1		RMF 32-15008	" 150Ω .25% 1/8W	R[illegible]	[illegible]
1		RMF 32-25008	" 250Ω .25% 1/8W	R[illegible]	[illegible]
1		RMF 32-50008	" 500Ω .25% 1/8W	R16	[illegible]
1		RMF 32-[illegible]	" 1.5K .25% 1/8W	R15	[illegible]
1		RMF 32-2.25000	" 2.5K .25% 1/8W	R14	[illegible]
1		RMF 32-50000	" 5K .25% 1/8W	R1[illegible]	21
1		RCC10-682	" [illegible]K 5% 1/4W	R26	20
3		RCC10-682	" [illegible]K [illegible] 1/4W	R12,[illegible]	18
1		RMF15-10000	" 1K 1% 1/8W	R[illegible]	[illegible]
2		RMF15-21500	" 2.5K [illegible] 1/8W	R7,8	[illegible]
1		RCC10-105	" 1MΩ [illegible] 1/4W	R6	[illegible]
1		RMF14-10002	" [illegible]K [illegible] 1/4W	R5	[illegible]
3		RCC10-102	" 1K 5% 1/4W	R2,3,4	14
1		RWW6-108	RESISTOR [illegible]Ω 3% 5W	R1	13
1		SOC4-3	CONNECTOR 16 PIN DIP.	J1	[illegible]
1		CEL 162	CAP. 1MF 6V	C7	11
1		CEL 167	CAP. 1.5MF 6V	C6	10
2		CEL 168	CAP. 3.3MF 6V	C4,5	[illegible]
1		CMM 48	CAP. .047MF	C3	8
1		CEL 84	CAP. 6.8MF 15V	C2	7
1		CMM 43	CAP. .47MF	C1	6
2		DIO 4148	DIODE 1N4148	D1,2	5
2		OPA 307N	OP AMP LM307N	IC 1,2	4
1		804B404-1	SWITCH 2 POLE 12 POS.	S1	3
2		KPC21M	CONNECTOR MALE		2
1		804C 301-1	P.C.B. AMP/VOLT		1

PARTS LIST

MATERIAL	DN. D. DRAKE	DATE NOV.11,80	ESTERLINE ANGUS INSTRUMENT CORP. INDIANAPOLIS, IND. U.S.A.
EA MAT'L NO.	CH		AMP/VOLT ASS'Y
FINISH	AP		PC.B. ASS'Y DWG.
	UNLESS OTHERWISE SPECIFIED DIMENSIONS ARE IN INCHES TOLERANCES ANGLES ± FRACTIONS ± DECIMALS ± REMOVE BURRS AND SHARP EDGES		SIZE / FSCM NO 72264 / DWG. NO. 804C301-6
			SCALE 2-1 / RELEASED EPR 06429 / SHEET 1 OF [illegible]

NEXT ASSY | USED ON
APPLICATION

NOV. 17, 80

REVISIONS

ECN	LET	CHANGE		DATE
9040	A	TURNED ASSY OVER TO GAIN SPACE	TM	7-14-77
9300	B	CHG. IT.# 41 FROM NOT REQ. TO REQUIRED	CWD	9-9-78
9326	C	IT.# 53 WAS RCC10-151, IT.# 63 WAS ICT1003	CWD	1-31-79
9363	D	IT.# 48 WAS RPC-31 DOW PRC25	JD	[illegible]
9457	E	CHG VIEW ONLY-NO B/M CHG	JD	[illegible]
10138	F	ITEM 11 WAS 4" LG.	S.K.N	6/6/79
		-8 ASSY RELEASED EPR # 6416	[illegible]	[illegible]
10698	G	Under REVISIONS, change EPR to ECN	[illegible]	[illegible]
C2533	H	R1 & R2 WAS RWW 30-680		2-23-82
12507	I	DIR-DF04M WAS 14127-2		[illegible]
12581	J	SEE ECN 12581		[illegible]
[illegible]	K	[illegible] HX 51226 BUS. WIRE [illegible]		[illegible]

NOTE

1. ITEMS MARKED WITH ● ARE NOT REQUIRED IN THE -6 OR -7 ASSY'S.
2. ITEM 12 (BK. WIRE) WITH ITEM 9 (CONNECTOR) ARE TO BE PLUGGED ONTO PIN MARKED 'FS' FOR STANDARDIZATION OF ASSY'S
3. MARK ASSY NO. ON COMPLETED ASSY
4. ASSY 752C306-6 = STANDARD ASSY "OBSOLETE 11-11-87 SP"
   752C306-7 = STANDARD ASSY + EVENT PULSE
   752C306-8 = STANDARD ASSY + INPUT FILTER AND PROTECTION
5. 752C306-8 REPLACES 752C306-6

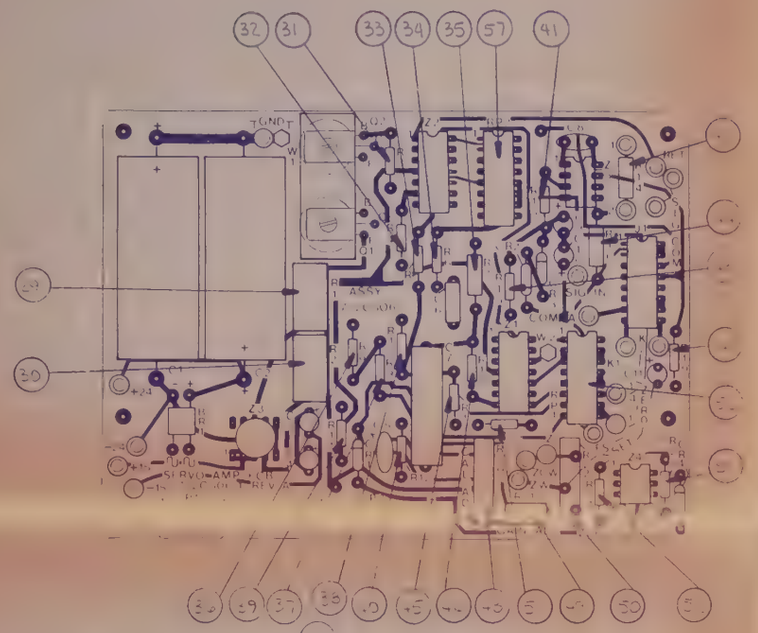

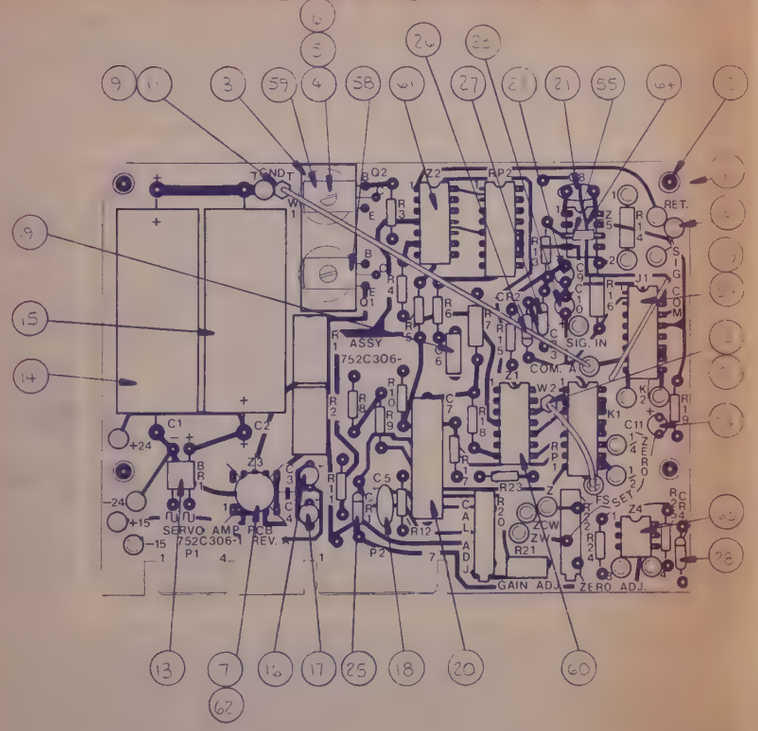

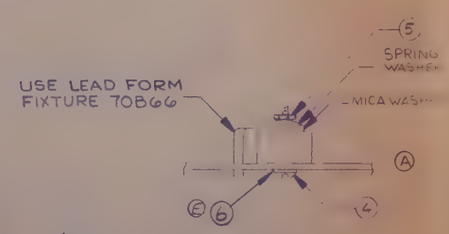

NOTE
USE SILICON GREASE BETWEEN TRANSISTOR, MICA WASHER AND HEAT SINK.

QTY-8	QTY-7	QTY-6	EA PART NO.	DESCRIPTION	REF	REV
—	—	—	—	OPT [illegible]	[illegible] ●	
—	1		ICTFCD-865	FCD 865	Z4	C D
1			[illegible]	LM3[illegible]	Z3	
1		1	[illegible]	LM3[illegible]	Z2	
1		1	[illegible]	[illegible]	Z1	
1	1	1	TRA[illegible]	2N5[illegible] TRANSISTOR	Q2	
1		1	TRA5190	[illegible] TRANSISTOR	Q1	
1	1		RDE[illegible]	RESISTOR [illegible]	[illegible]	
1	1	1	RUE-9	RESISTOR [illegible]	[illegible]	
1	1	1	RCC10-000	RESISTOR 0Ω	W3	K
1	1	1	SOC4-3	16 PIN SOCKET	J1	
—	1	—	RCC1-392	3.9K Ω 1/2 W	R25	53 C
—	1	—	RCC10-472	4.7K 1/4W 5%	R24	52
1	1	1	RCC10-821	820Ω 1/4W 5%	R[illegible]	51
—	—	—	PPC-12	10K ZERO POT	R21 ●	50
1	1	1	PPC-26	5K GAIN POT	R[illegible]	49
1	1	1	PPC 25	500Ω [illegible]	R20	48 C
—	1	—	RCC10-4[illegible]	[illegible]	R19	47
1	1	1	52[illegible]-31	18.2K RMF 1%	R18	[illegible]
1	1	1	RCC 10-102	1K 1/4W 5%	R17	45
—	—	—	RMF15-49900	4.99K RMF 1%	R16 ●	44
1	1	1	RCC-10-682	6.8K 1/4 W 5%	R15	43
—	—	—	—	GAIN RESISTOR	R14 ●	42
1	1	1	RCC10-682	6.8K 1/4W 5%	[illegible]	41 E
QTY-8	QTY-7	QTY-6	EA PART NO.	DESCRIPTION	REF	REV

QTY-8	QTY-7	QTY-6	EA PART NO.	DESCRIPTION	REF
1			[illegible]	[illegible]	[illegible]
1			[illegible]	[illegible]	[illegible]
1			[illegible]	[illegible]	[illegible]
1			[illegible]	[illegible]	[illegible]
1			[illegible]	[illegible]	[illegible]
1			[illegible]	[illegible]	[illegible]
1			[illegible]	[illegible]	[illegible]
1			[illegible]	[illegible]	[illegible]
1			[illegible]	[illegible]	[illegible]
1			[illegible]	[illegible]	[illegible]
1	1	1	[illegible]-400	40Ω [illegible]	[illegible]
1	1	1	[illegible]-400	40Ω [illegible]	[illegible]
—	1	—	[illegible]	[illegible]	[illegible]
1	—	—	DIR [illegible]	[illegible] BENT	[illegible] ●
1	—	—	DIR [illegible]	[illegible] BENT	[illegible] ●
1	1	1	[illegible]	[illegible]	[illegible]
—	1	—	[illegible] 80	[illegible]	[illegible]
1	—	—	[illegible]	[illegible]	[illegible] ●
1	—	—	[illegible]	[illegible]	[illegible] ●
—	—	—	[illegible]	[illegible] 200V	[illegible] ●
1	1	1	CMM-58	1.0μf MYLAR	C7
1	1	1	CM[illegible]	[illegible]	[illegible]
1	1	1	CE[illegible]	[illegible]	[illegible]
1	1	1	CEL 80	[illegible]	[illegible]
1	1	1	CEL-80	[illegible]	C3
1	1	1	CEL-120	1000μf 50V	[illegible]
1	1	1	CEL-120	1000μf 50V	[illegible]
1	1	1	DIR-DF04M	BRIDGE RECTIFIER	[illegible]
1½"	1½"	1½"	0768	WIRE 22 GA. BK	W2
4¼"	4¼	4¼	0770	WIRE 22 GA. GREEN	[illegible]
1	1	1	16755973-003	RUBBER TIE	
2	2	2	KPC-21F	FEMALE CONNECTOR	
22	22	22	[illegible]	[illegible]	
1	1	1	52153	HEATSINK	
2	2	2	ND40220-6	WASHER	
2	2	2	43141	NUT	
2	2	2	[illegible]	SCREW 4-40 x 5/8	
1	1	1	70A178	HEATSINK	
4	4	4	[illegible]	[illegible]	
1	1	1	[illegible]	SERVO AMP PC BOARD	
QTY-8	QTY-7	QTY-6	EA PART NO.	DESCRIPTION	REF

UNLESS OTHERWISE SPECIFIED DIMENSIONS ARE IN INCHES
TOLERANCES:
ANGLES ±
FRACTIONS ±
DECIMALS ±

REMOVE ALL BURRS AND SHARP EDGES. DIMENSIONS AND TOLERANCES SHALL BE HELD AFTER PLATING.

MATERIAL

FINISH

RELEASED-EPR [illegible]

NO REQ	USED ON	STYLE NO

CLASSIFICATION

DR [illegible]
CH
AP

ESTERLINE ANGUS DIVISION,
ESTERLINE CORP
INDIANAPOLIS, IND. U.S.A.

NAME
[illegible]
A.C. MODULAR

SCALE [illegible]
DATE
REV

ECN	LET	DESCRIPTION
[illegible]	M	SEE ECN
1275[illegible]	N	IT.25 WAS RCC10-000
12[illegible]27	DEV	SPCL. DEVIATION/NO REV. CHANGE TO DWG.

DATE	APPR.
11-11-87	
4-3-88	
7-25-88	

REVISIONS

ECN	LET	DESCRIPTION	DAT	APPR
10226	F	SEE [illegible] IN (ALDELL ITEMS 50, 51, 52)	[illegible]	
10261	G	[illegible]	[illegible]	
10286	H	ITEM 44 WAS ICT 7BL06	[illegible]	
C2098	J	C4 chg'd FROM .01 MFD TO .1 MFD	[illegible]	
C2429	K	ADDED C6, C7, [illegible]	[illegible]	
C2551	L	REMOVED BUSS WIRE HX51226 ITEMS 24 & 27. REMOVED ITEM 26 AND ADDED TO ITEM 25.	3/4/82	

REVISIONS

ECN	LET	DESCRIPTION	DATE	APPR
9335	A	ADDED R17, R18 & R19	2/10/73	
9399	D	CHG. R1 THRU R8 AND Z7	3-14-73	
9542	E	SEE ECN	5/-4/73	

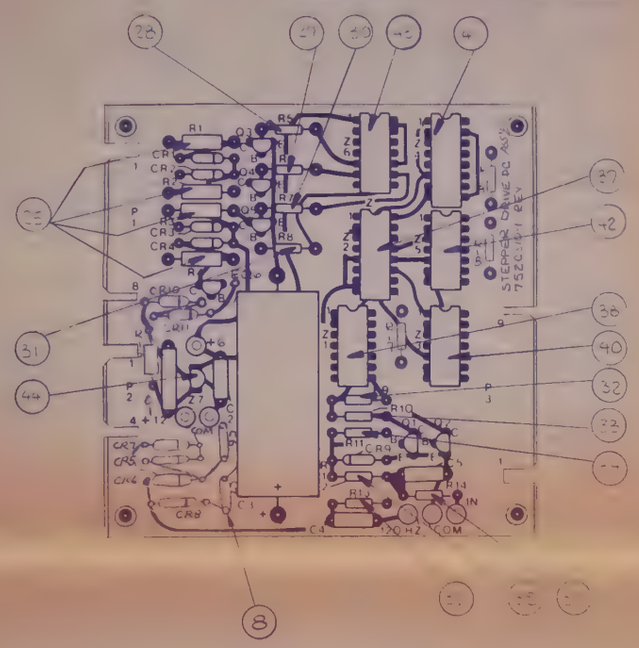

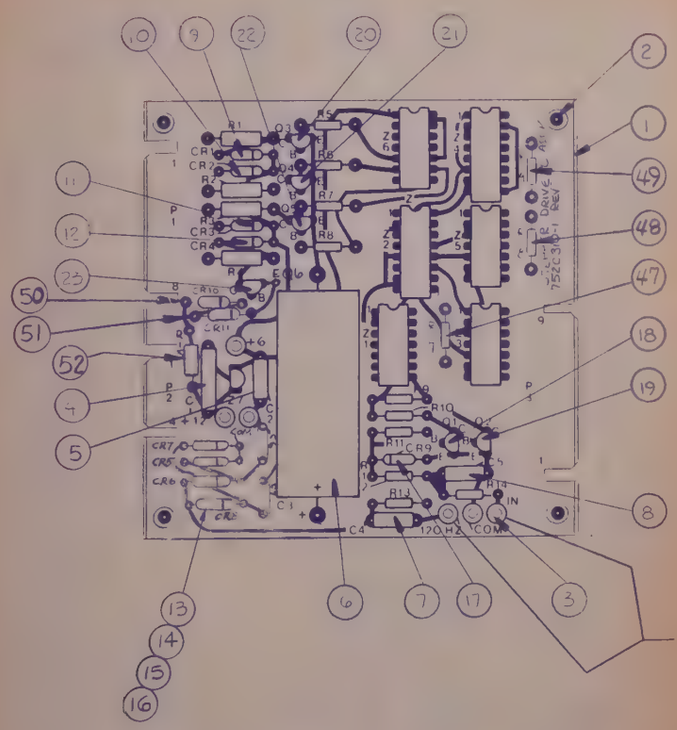

SEE NOTE 1

WARNING!:

CIRCUITRY USES C-MOS COMPONENTS (ITEMS 38 THRU 43) AND SHOULD BE ASSEMBLED IN ACCORDANCE TO C-MOS PRECAUTIONS.

1. INSTALL JUMPER WIRE (SEE DETAIL A) FROM PIN LABELED '120HZ' TO PIN LABELED 'N'.

QTY. REQD.	DATA SHEET ITEM	PART NO.	DESCRIPTION	REMARKS	FIND OR ITEM NO.
1		RCC 10-562	5.6KΩ 1/4W 5%	R15	52
1		43421	IN4004 DIODE	CR11	51
1		43421	IN4004 DIODE	CR10	50
1		RCC-10-104	100KΩ 1/4W 5%	R19	49
1		RCC-10-103	10KΩ 1/4W 5%	R18	48
1		RCC-10-104	00KΩ 1/4W 5%	R17	47
1		ND40042-36	WIRE RO 1½" LONG #22GA.		46
[illegible]		[illegible]	FEMALE CONNECTOR	SEE DETAIL 'A'	45
1		ICT 78[illegible]5	[illegible]	Z7	44
1		MOS-74[illegible]	[illegible]	Z6	43
1		MOS-74[illegible]	[illegible]	Z5	42
1		MOS-74C76	[illegible]	Z4	41
1		MOS-74C90	[illegible]	Z3	40
1		MOS-74C76	[illegible]	Z2	39
1		MOS-[illegible]	[illegible]	Z1	38
1		[illegible]	1.2KΩ [illegible] 5%	R14	37
1		[illegible]	[illegible] 5%	R13	36
1		[illegible]	[illegible] 5%	R12	35
		[illegible]	MΩ 1/4W 5%	R11	34
1		[illegible]	[illegible]	[illegible]	33
		[illegible]	[illegible]		
1		RCC 10-222	2.2 KΩ [illegible] 5%	R[illegible]	[illegible]
1		RCC 10-222	2.2 [illegible]	R[illegible]	[illegible]
1		RCC 10-222	2.2 KΩ [illegible] 5%	R[illegible]	[illegible]
1		RCC 10-222	2.2 KΩ [illegible] 5%	R5	[illegible]
					[illegible]
					26
4		[illegible]	150Ω [illegible] 5%	R1, R2, R3, R4	25
					24
1		45362	2N4400 TRANSISTOR	Q6	23
1		45362	2N4400 TRANSISTOR	Q5	22
1		45362	2N4400 TRANSISTOR	Q4	21
1		45362	2N4400 TRANSISTOR	Q3	20
1		TRA[illegible]	2N3904 TRANSISTOR	Q2	19
1		TRA 3904	2N3904 TRANSISTOR	Q1	18
1		[illegible]	IN4148 DIODE	CR9	17
1		43421	IN4004 DIODE	CR8	16
1		43421	IN4004 DIODE	CR7	15
1		43421	IN4004 DIODE	CR6	14
1		43421	IN4004 DIODE	CR5	13
1		43421	IN4004 DIODE	CR4	
1		43421	IN4004 DIODE	CR3	11
1		43421	IN4004 DIODE	CR2	10
1		43421	IN4004 DIODE	CR1	9
3		[illegible]	.1 µf 50V CERAMIC CAP	C5, C6, C7	8
1		CMM-39	1 µf 250V MYLAR CAP.	C4	7
1		[illegible]	1000 µf 35V ELECTROLYTIC CAP	C3	6
1		CMM-[illegible]	.1 µf 250V MYLAR CAP.	C2	[illegible]
1		CMM-52	.22 µf 250V MYLAR CAP.	[illegible]	[illegible]
6		[illegible]	MALE CONNECTOR		3
4		[illegible]	[illegible]		[illegible]
1		752C310-1	STEPPER DRIVE PC BOARD		

PARTS LIST

UNLESS OTHERWISE SPECIFIED DIMENSIONS ARE IN INCHES
TOLERANCES:
ANGLES ±
FRACTIONS ±
DECIMALS ±

SCHEMATIC SEE 752C107-5

REMOVE ALL BURRS AND SHARP EDGES. DIMENSIONS AND TOLERANCES SHALL BE HELD AFTER PLATING.

FINISH

RELEASED-EPR [illegible] 5-6-77

752C107

NO REQ | USED ON | STYLE NO

MIN. 33

CLASSIFICATION

ESTERLINE ANGUS DIVISION, ESTERLINE CORP
INDIANAPOLIS, IND. U.S.A.

NAME: STEPPER DRIVE PC BOARD ASSY

DR [illegible] | CH | AP | DATE 3-4-[illegible] | SCALE FULL | 752C310-6 | REV

752C310-6

Pyne Graphic Inc.

SECTION 7

PARTS LIST

Table 7-1. Ammeter/Voltmeter Module.

ITEM REF. NO.	PART NUMBER	DESCRIPTION	QTY.
	804D101	Ammeter/Voltmeter Module (complete)	1
PCB1	804C301-6	*PC Board Assembly	1
	43140-4	*Screw, PCB Mtg. (4-40 x 1/4")	5
	73A51	*Spacer, PCB Hex	3
T1	804B406	*Transformer, AC Input	1
R101, R102	RWW6-503	*Resistor, WW, 50K, 3%, 5W	2
TB1	804C400-4	*Terminal Block, Module (4 Pos., 600V)	1
	804B624	*Bracket, Terminal Block Mtg.	1
	723A63	*Knob, Range Switch (w/set screws)	1
	797C655	*Box, Module	1
	804B617	*Escutcheon, Module Front	1
	752B699	*Bezel, Front Plastic (Escut. Mtg. Plate)	1
	752B672	*Cover, Plastic Alarm	1
	804A631	*Label, "R" Number	1
	804A630	*Label, Danger	1

Table 7-2. Zero Adjustment Assemblies.

ITEM REF. NO.	PART NUMBER	DESCRIPTION	QTY.
	804C300-6	Zero Potentiometer Assy. (Model S-22906)	1 A/R
	804C300-7	Zero Potentiometer Assy. (Model S-22907)	1 A/R
	804C300-1	*PC Board (Less Parts)	1
R1, R2, R3	PPC-12	*Potentiometer, 10K Ohms (Zero Adjust R_z)	A/R
	KPC-21F	*Connector, Female Wire-Terminal	A/R
	43138-4	*Tie, Cable	A/R

REVISIONS

DWG. NO. 804A902--☐

REV	DESCRIPTION	DATE	APPROVED
A	RELEASED -1 EPR C2079	3-16-82	
B	P/N WAS 752C427	8/29/83	ECN C3157
C	REMOVED 812D13 QTY. 1	9-27-83	ECN 11412

cont. below

Amount		Part #	Description
—	—	812D13 (REF)	Current Transformer
1	1	804C511-1	Transformer Lead
1	1	804C508-1	Voltmeter Lead
.167	.167	723A26-6	Pen Kit (6 pens)
1	1	M804D10/11	Manual
1	1	752A538	Fuse Kit
.167	.167	59322-T100	6 PACK CHARTS
1	–	752A907	INK CARTRIDGE (EVENT)
804A902-1	804A902	"ACCESSORY KIT"	

LET	DESCRIPTION	DATE	ECN #
E	CHARTS PEN QTY. FROM 2 TO .167	10/90	13615
D	SEE ECN	[illegible]	[illegible]

DN. W.R.K. | DATE

CH.

AP.

NOTES

NEXT ASSY. S22907-1-☐

ESTERLINE ANGUS INSTRUMENT CORP.
INDIANAPOLIS, INDIANA U.S.A.

MS I AC Voltmeter/Ammeter
Stock "5" "ACCESSORY KIT"

A | DWG. NO 804A902 - ☐

SCALE | SHEET 1 of 1

RELEASED EPR C1695 / C2079

3/16/82

REVISIONS

DWG. NO. 804A903-□

REV	DESCRIPTION	DATE	APPROVED
A	RELEASED -1 EPR C2079	3-16-82	
B	P/N WAS 752C427	8/29/83	ECNC3156
C	REMOVED 812D13 QTY. 3	7-27-83	ECN 11412

cont. below

Amount		Part #	Description
—	—	812D13 (REF)	Current Transformers
1	1	804C511-1	Transformer Lead Red
1	1	804C511-2	Transformer Lead Black
1	1	804C511-3	Transformer Lead Blue
1	1	804C508-1	Voltage Lead Red
1	1	804C508-2	Voltage Lead Black
1	1	804C508-3	Voltage Lead Blue
.167	.167	752A900-1-6	Blue Pen Kit (6 pens)
.167	.167	752A900-2-6	Red Pen Kit (6 pens)
.167	.167	752A900-3-6	Black Pen Kit (6 pens)
1	1	M804D10/11	Manual
1	1	752A538	Fuse Kit
.167	.167	59322-T100	6 PACK CHARTS
1	—	752A907	INK CARTRIDGE (EVENT)
804A903-1	804A903-2		

"ACCESSORY KIT"

LET	DESCRIPTION	DATE	ECN#
E	CHART QTY. WAS 2 PEN QTYS WERE 2 & 6	10/15/80	13615
D	SEE ECN	12/17/79	12006

DN. W.R.K.	DATE	ESTERLINE ANGUS INSTRUMENT CORP. INDIANAPOLIS, INDIANA U.S.A.
CH.		MS III Voltmeter/Ammet[redacted] Stock Unit "4" "ACCESSORY KIT"
AP.		

NOTES

NEXT ASSY

S22906-1-□

A		DWG. NO. 804A903-□
	SCALE	SHEET 1 of 1

RELEASED EPR ~~C1695~~ / C2079

3/16/82

SECTION 8

OPTIONAL RECORDER ATTACHMENTS:

EVENT PEN FOR MODELS S-22906 & S-22907
ALARM WIRING, SCHEMATICS, & ASSEMBLIES.

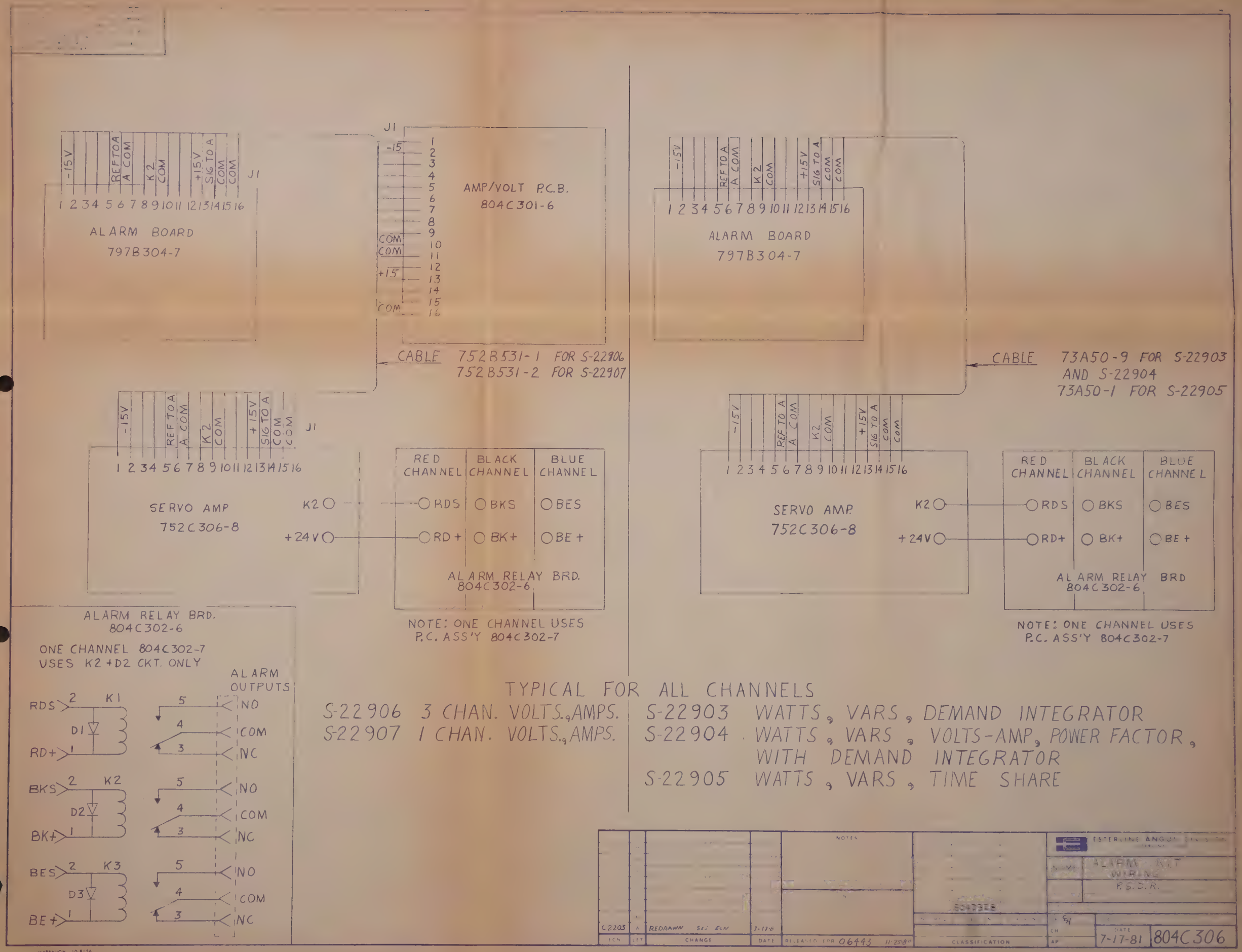

-15V
REF TO A
A COM
K2
COM
+15V
SIG TO A
COM
COM
J1
1 2 3 4 5 6 7 8 9 10 11 12 13 14 15 16
ALARM BOARD
797B304-7
AMP/VOLT P.C.B.
804C301-6
-15
COM
COM
+15
COM
CABLE 752B531-1 FOR S-22906
752B531-2 FOR S-22907
SERVO AMP
752C306-8
K2
+24V
RED CHANNEL
BLACK CHANNEL
BLUE CHANNEL
RDS
BKS
BES
RD+
BK+
BE+
ALARM RELAY BRD.
804C302-6
NOTE: ONE CHANNEL USES P.C. ASS'Y 804C302-7
CABLE 73A50-9 FOR S-22903 AND S-22904
73A50-1 FOR S-22905
ALARM RELAY BRD.
804C302-6
ONE CHANNEL 804C302-7 USES K2 + D2 CKT. ONLY
ALARM OUTPUTS
RDS
RD+
BKS
BK+
BES
BE+
K1
K2
K3
D1
D2
D3
NO
COM
NC
TYPICAL FOR ALL CHANNELS
S-22906 3 CHAN. VOLTS., AMPS.
S-22907 1 CHAN. VOLTS., AMPS.
S-22903 WATTS, VARS, DEMAND INTEGRATOR
S-22904 WATTS, VARS, VOLTS-AMP, POWER FACTOR, WITH DEMAND INTEGRATOR
S-22905 WATTS, VARS, TIME SHARE
C2203
REDRAWN
7-17-6
RELEASED EPR 06443 11-25-80
CLASSIFICATION
ESTERLINE ANGUS
ALARM KIT WIRING
P.S.D.R.
7-17-81
804C306

DWG. NO. 797B304-S

REVISIONS			
REV	DESCRIPTION	DATE	APPROVED
A	ECN 13189 LED WAS 650 R3, R8 WAS 270Ω	6-14-89	

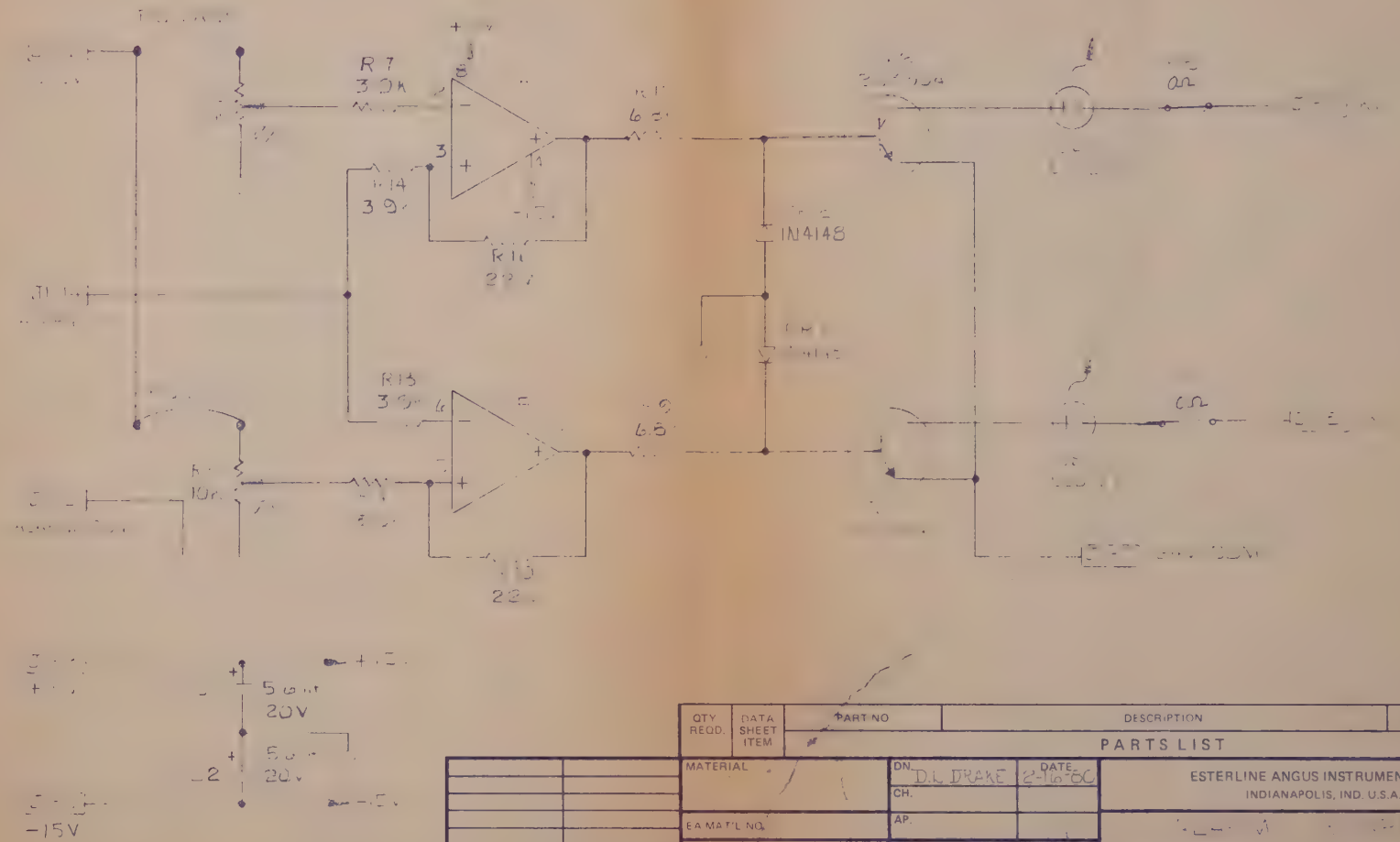

QTY REQD.	DATA SHEET ITEM	PART NO	DESCRIPTION	REMARKS	ITEM NO.

PARTS LIST

NEXT ASSY	USED ON

APPLICATION

MATERIAL

EA MAT'L NO.

FINISH

DN. D.L. DRAKE DATE 2-16-80

CH.

AP.

UNLESS OTHERWISE SPECIFIED DIMENSIONS ARE IN INCHES
TOLERANCES
ANGLES ±
FRACTIONS ±
DECIMALS ±
REMOVE BURRS AND SHARP EDGES

ESTERLINE ANGUS INSTRUMENT CORP.
INDIANAPOLIS, IND. U.S.A.

SIZE B FSCM NO. 72264 DWG. NO. 797B304-S

SCALE NONE RELEASED EPR SHEET 1 of

TELEDYNE POST N62248

REVISIONS				
ZONE	REV	DESCRIPTION	DATE	[illegible]
	A	[illegible]	12-3-81	C 2393
	B	ADDED ALL COLOR DOTS TO -1, -3, -6, -7	4-6-82	C 26[illegible]
		ITEM 8 WAS 16765278 214	4-15-82	[illegible]213
		[illegible]	5-21-82	[illegible]

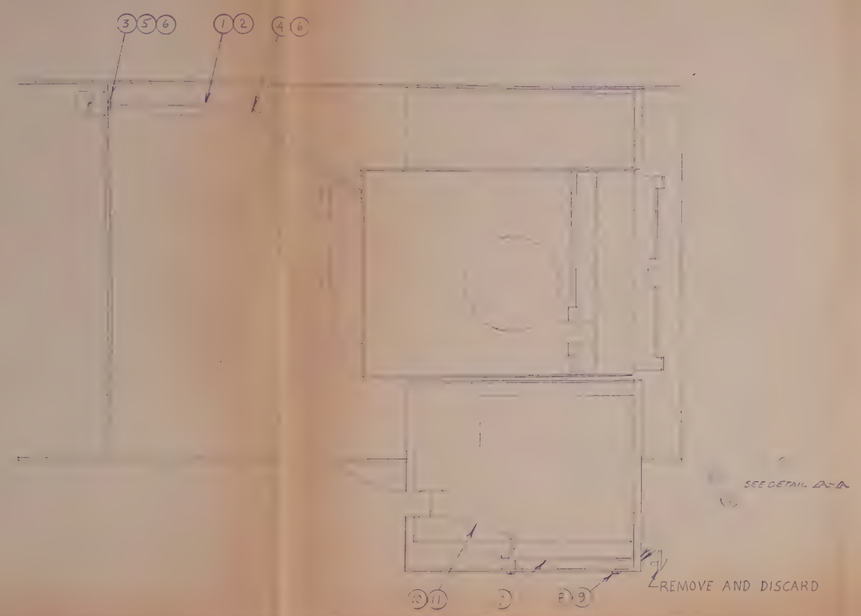

1. RED CHANNEL INSTALLATION ONLY, SHOWN. FOR BLACK OR BLUE CHANNELS ADD ALARM BOARD AND APPROPRIATE CABLE TO PROPER PRE AMP MODULE OR PRE AMP BOX.
2. REMOVE PRE AMP MODULE MOUNTING SCREWS AND LAY BOX DOWN AS SHOWN.
3. IF FLAT CABLE IS CONNECTED TO J1 OF SERVO AMP. BOARD REMOVE AND DISCARD. INSTALL NEW FLAT CABLE.
4. FOR ALARM ON BLACK CHANNEL OF S22903, REMOVE AND DISCARD BLANK PANEL. INSTALL EMPTY PRE AMP BOX AS SHOWN BELOW.
5. ALL PARTS TO BE PACKED IN POLY BAG.

S22903 ONE CHANNEL OF ALARM, RED OR BLUE CHANNEL
S22904 ONE CHANNEL OF ALARM, ANY CHANNEL
S22905 ONE CHANNEL OF ALARM
S22906 ONE CHANNEL OF ALARM, ANY CHANNEL
[illegible]
S22903 ADDITIONAL [illegible]
S22904 ADDITIONAL ALARM
[illegible]

REF TO 804C306 FOR WIRING

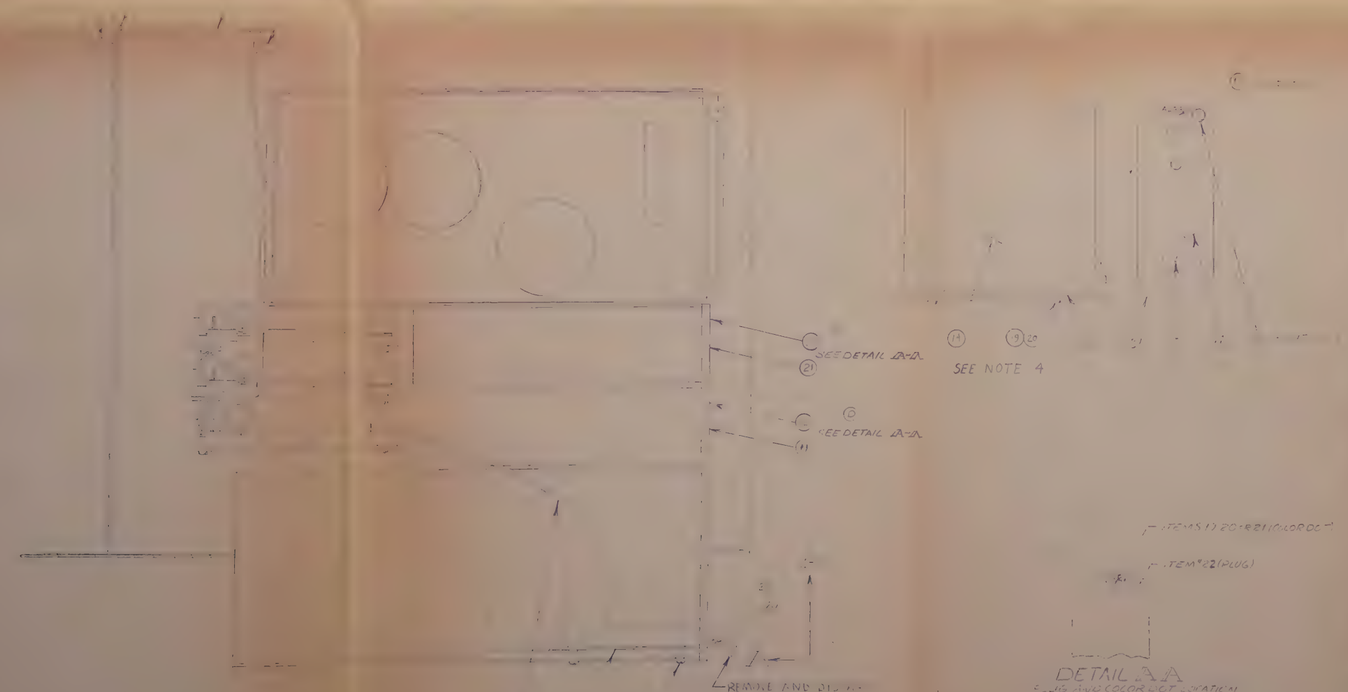

PART NO.	DESCRIPTION	REMARKS	ITEM NO.
ND40163-1	PLUG BUTTON		
[illegible]	[illegible]		
01669	[illegible]		[illegible]
[illegible]	[illegible]		[illegible]
ND40101-10	SCREW 4-40 X 1/4 [illegible] M.S.		18
[illegible]	ESCUTCHEON ALARM		17
752B[illegible]	BEZEL		16
804A[illegible]	SPACER 1 DIA. X 3/16 THK.		15
7[illegible]	BOX PRE AMP.		14
7[illegible]	CABLE		13
73A50-9	CABLE		12
752B531-1	CABLE		11
752B531-2	CABLE		10
SP [illegible]	WASHER NO. 4		9
[illegible]	SCREW 4-40 X 1/4 BIND. HD. M.S.		8
7978304-7	ALARM BOARD		7
SP 906	WASHER NO. 6		6
NX 2006	NUT 6-32 HEX		5
HX 38017	SCREW 6-32 X 1/4 PAN HD. M.S.		4
NX 96612	SCREW 6-32 X 3/4 BIND. HD. M.S.		3
804C[illegible]-6	ALARM RELAY BD. THREE CHAN.		2
804C[illegible]-7	ALARM RELAY BD. SINGLE CHAN.		1

PARTS LIST

NEXT ASSY	USED ON
APPLICATION	

MATERIAL
EA MAT'L NO
FINISH

UNLESS OTHERWISE SPECIFIED DIMENSIONS ARE IN INCHES
TOLERANCES
ANGLES ±
FRACTIONS ±
DECIMALS ±
REMOVE BURRS AND SHARP EDGES

ESTERLINE ANGUS INSTRUMENT CORP
INDIANAPOLIS, IND. U.S.A.

ALARM RELAY KIT
1 & 3 CHANNEL P.S.D.R.

SIZE D | FSCM NO 72264 | DWG. NO 804D3[illegible]-□
SCALE — | RELEASED EPR C1954 | SHEET [illegible]

DWG NO 79TB304-[illegible]

REVISIONS			
REV	DESCRIPTION	DATE	~~APPROVED~~
A	ADDED -7	11-[illegible]	[illegible]
B	.125 ±.015 WAS .085 ±.015	12-27-80	ECN 10747
C	ADDED NOTE 2 PER B-83-9 ASSEMBLY [illegible]	10-20-81	ECN-C2337
D	ADDED T.26 VOICE TAIL (QTY 1)	0-9-82	C2[illegible]10
E	R3, R8 WAS 270Ω, Rec1-271	6-14-89	1318

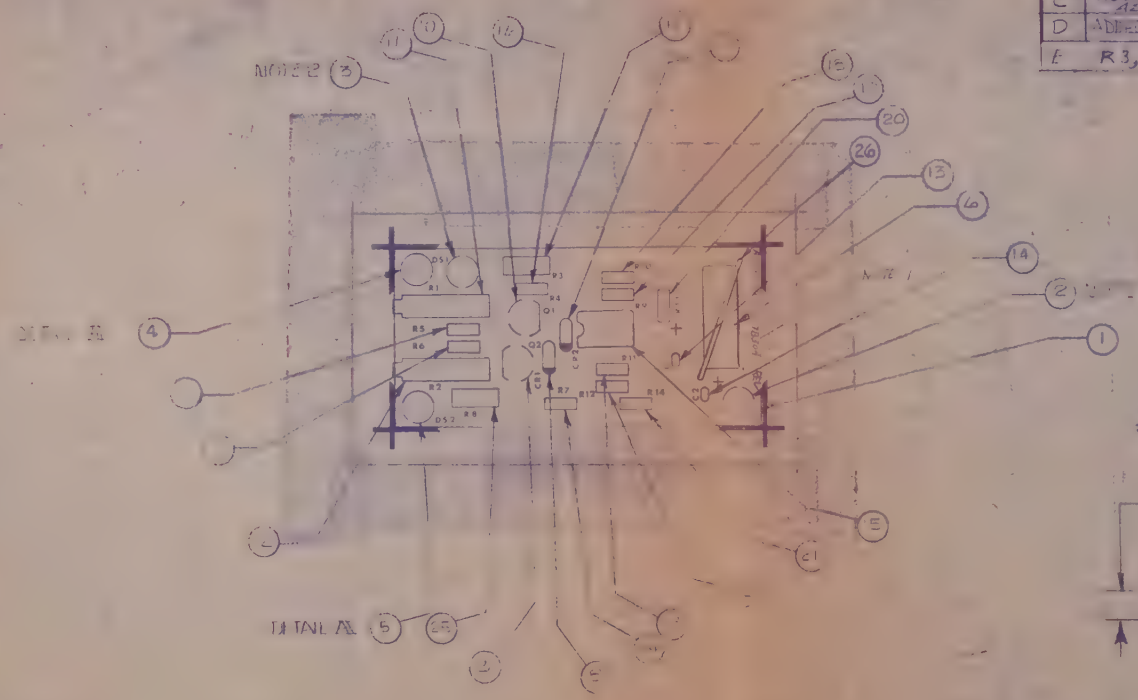

-E ASS'Y SHOWN

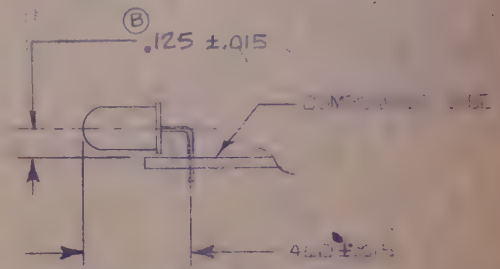

DETAIL B-A
SCALE: 2X

NOTE: 1
1. MARK WITH APPROPRIATE DASH Nº AND REV. AFTER ASS'Y
2. ITEMS 2-3 TO BE INSTALLED FIRST

QTY. REQD.	DATA SHEET ITEM	PART NO	DESCRIPTION	REMARKS	ITEM NO

PARTS LIST

APPLICATION	
GRADE-A 5 [illegible]	
79TD10	[illegible]
79TD112	" "
NEXT ASSY	USED ON

MATERIAL
DN. [illegible] DATE [illegible]
CH
EA MAT'L NO
AP.
FINISH

UNLESS OTHERWISE SPECIFIED DIMENSIONS ARE IN INCHES
TOLERANCES
ANGLES ±
FRACTIONS ±
DECIMALS ±
REMOVE BURRS AND SHARP EDGES

ESTERLINE ANGUS INSTRUMENT CORP.
INDIANAPOLIS, IND. U.S.A.

ASSEMBLY DRAWING
ALARM BOARD

SIZE	FSCM NO.	DWG. NO
B	72264	79TB304-[illegible]

SCALE 1:1 RELEASED EPR [illegible] SHEET 1 OF [illegible]

TELEDYNE POST

DWG NO 797B304-[illegible]

REVISIONS			
REV	DESCRIPTION	DATE	APPROVED
	SEE SHT #1		

QTY.	QTY. REQD. -6	DATA SHEET ITEM	PART NO.	DESCRIPTION	REMARKS	ITEM NO.
						7
1	1		16755973-003	STRAP-RUBBER (MOUSETAIL)		26 (D)
1	1		RCC-10-000	RESISTOR, 0 Ω JUMPER	R8	[illegible]
1	1		RCC 10-392	RESISTOR 3.9K 1/4W	R7	24
1	1		RCC 10-226	RESISTOR 22MEG 1/4W	R11	23
1	1		RCC 10-682	RESISTOR 6.8K 1/4W	R12	22
1	1		RCC 10-392	RESISTOR 3.9K 1/4W	R14	21
—	1		RCC 10-392	RESISTOR 3.9K 1/4W	R13	20
—	1		[illegible]	RESISTOR 6.8K 1/4W	[illegible]	[illegible]
—	1		RCC 10-226	RESISTOR 22MEG 1/4W	R10	18
—	1		RCC 10-000	RESISTOR 0 Ω JUMPER	R3	17
—	1		RCC 10-392	RESISTOR 3.9K 1/4W	R4	[illegible]
1	1		ICT 5558	INTEGRATED CIRCUIT	U1	[illegible]
1	1		CEL 80	CAP. 5.6 uf 20V	C2	14
1	1		CEL 80	CAP. 5.6 uf 20V	C1	13
1			PPC-12	RESISTOR POT 10K	R2	12
—			PPC-12	RESISTOR POT 10K	R1	11
—			[illegible]	TRANSISTOR 2N3904	Q1	[illegible]
1			[illegible]	TRANSISTOR 2N3904	Q2	[illegible]
1	1		DIO 4148	DIODE 1N4148	CR1	8
—	1		DIO 4148	DIODE 1N4148	CR2	7
1	1		SOC 4-3	SOCKET 16 PIN DIP		[illegible]
1			LED 220	LED HLMP-3002	DS2	5
—	1		LED 220	LED HLMP-3002	DS1	4
1			752A667	STAND OFF		3
1	1		752A667	STAND OFF		[illegible]
1			797B304-1	ALARM P.C. BOARD		1

PARTS LIST

Ⓐ -6 SERIES K,P AND MINI-SERVO III BENCH.
-7 MINI-SERVO POWER SURVEY.

NEXT ASSY	USED ON
804D328 □	M/S/P.S.
797D100	[illegible]
797D112	" "

APPLICATION

MATERIAL

EA MAT'L NO.

FINISH

DN. [illegible] DATE 1-28-[illegible]

CH.

AP.

UNLESS OTHERWISE SPECIFIED DIMENSIONS ARE IN INCHES
TOLERANCES
ANGLES ±
FRACTIONS ±
DECIMALS ±
REMOVE BURRS AND SHARP EDGES

ESTERLINE ANGUS INSTRUMENT CORP.
INDIANAPOLIS, IND. U.S.A.

ASSEMBLY DRAWING
ALARM BOARD

SIZE B | FSCM NO. 72264 | DWG. NO 797B304-[illegible]

SCALE [illegible] | RELEASED EPR [illegible] | SHEET [illegible]

TELEDYNE POST N62248

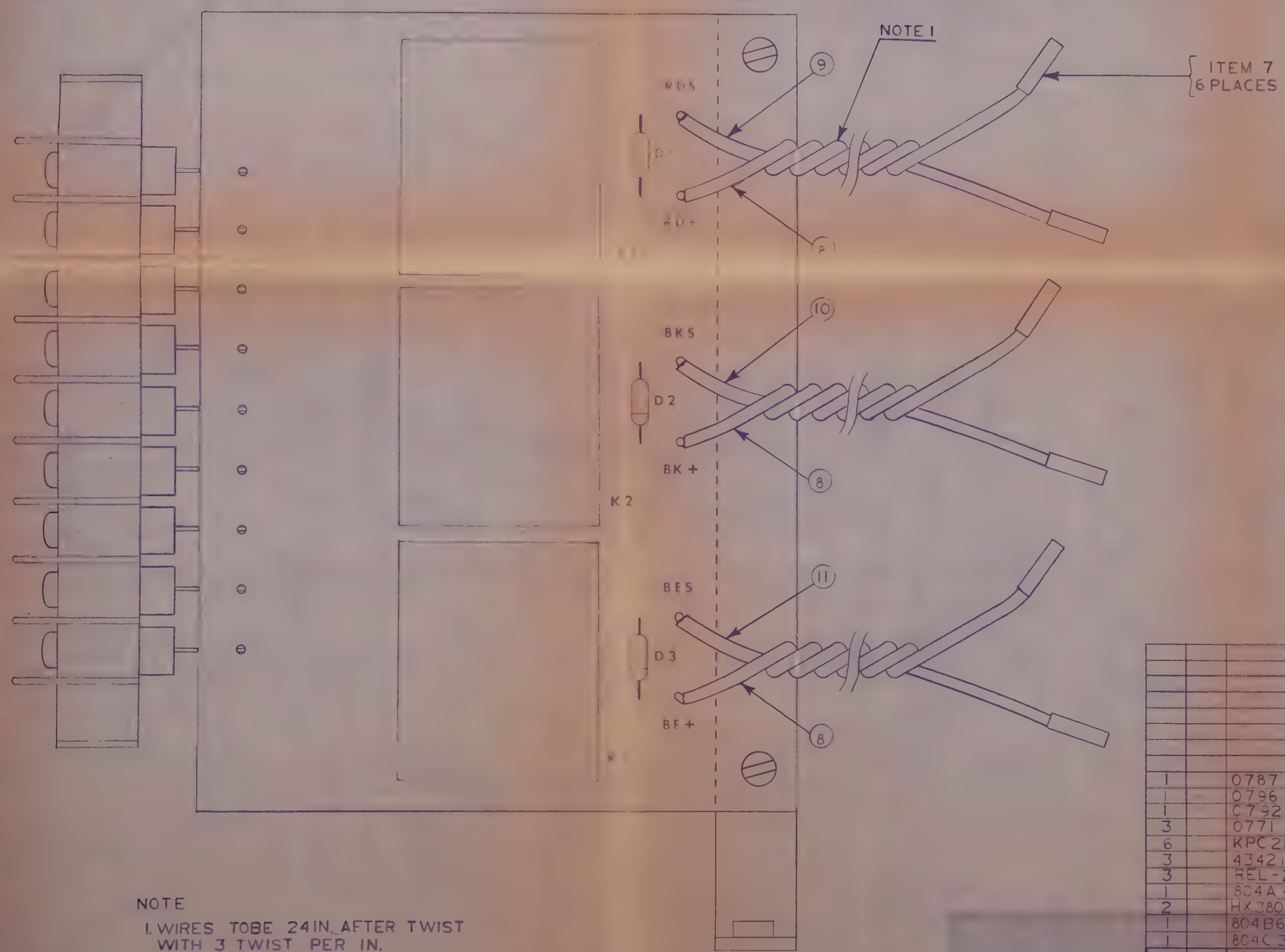

NOTE

1. WIRES TOBE 24IN. AFTER TWIST WITH 3 TWIST PER IN.

QTY. REQD.	DATA SHEET ITEM	PART NO.	DESCRIPTION	REMARKS	ITEM NO.
1		0787	WHITE / BLUE		11
1		0796	WHITE / BLACK WIRE		10
1		C792	WHITE / RED WIRE		9
3		0771	ORANGE WIRE		8
6		KPC21F	TERMINAL FEMALE		7
3		43421	DIODE	D1.2.3	6
3		REL-28	RELAY	K1.2.3	5
1		804A402	TERMINAL BLOCK		4
2		HX38017	6-32 X 1/4 SCREW		3
1		804B626	ALARM RELAY BOARD BRACKET		2
1		804C302-1	P.C.B. ALARM RELAY BOARD		1

PARTS LIST

804D328	
NEXT ASSY	USED ON
APPLICATION	

MATERIAL

EA MAT'L NO.

FINISH

DN. D.DRAKE DATE NOV 15.60

CH.

AP

UNLESS OTHERWISE SPECIFIED DIMENSIONS ARE IN INCHES
TOLERANCES.
ANGLES ±
FRACTIONS ±
DECIMALS ±
REMOVE BURRS AND SHARP EDGES

ESTERLINE ANGUS INSTRUMENT CORP.
INDIANAPOLIS, IND. U.S.A

ALARM RELAY BOARD ASS'Y
3 CHANNEL

SIZE | FSCM NO. 72264 | DWG. NO. 804C302-6

SCALE 2-1 | RELEASED EPR | SHEET 1 OF 1

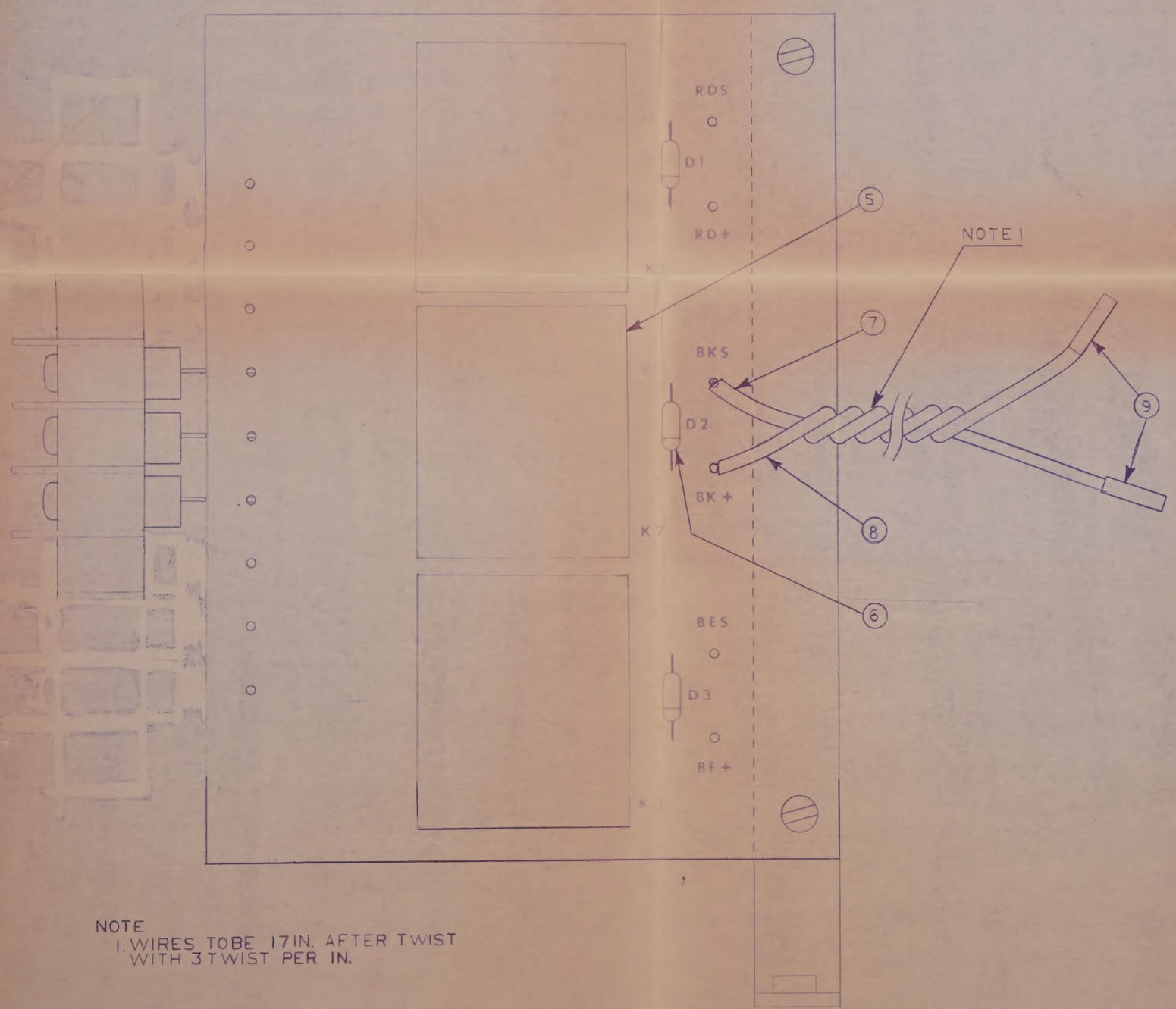

NOTE
1. WIRES TO BE 17 IN. AFTER TWIST WITH 3 TWIST PER IN.

QTY REQD	DATA SHEET ITEM	PART NO	DESCRIPTION	REMARKS	ITEM NO
2		KPC21F	TERMINAL FEMALE		10
1		0771	ORANGE WIRE		9
1		0796	WHITE / BLACK WIRE		8
1		43421	DIODE	D 2	7
1		REL-28	RELAY	K 2	6
1		804A405	TERMINAL BLOCK		5
2		HX38017	6-32 X 1/4 SCREW		4
1		804B626	ALARM RELAY BOARD BRACKET		3
1		804C302-1	P.C.B. ALARM RELAY BOARD		2
					1

PARTS LIST

804D328	
NEXT ASSY	USED ON
APPLICATION	

MATERIAL

EA MAT'L NO

FINISH

DN D. DRAKE DATE NOV. 13, 80
CH
AP

UNLESS OTHERWISE SPECIFIED DIMENSIONS ARE IN INCHES
TOLERANCES
ANGLES ±
FRACTIONS ±
DECIMALS ±
REMOVE BURRS AND BREAK EDGES

ESTERLINE ANGUS INSTRUMENT CORP.
INDIANAPOLIS, IND. U.S.A.

ALARM RELAY BOARD ASS'Y
ONE CHANNEL

SIZE | FSCM NO 72264 | DWG NO 804C302-7
SCALE 2-1 | RELEASED EFF 06428 | SHEET 1 OF 1

NOV. 17, 80

ACCOPRESS®

25070	YELLOW
25071	BLACK
25072	LIGHT BLUE
25073	DARK BLUE
25074	LIGHT GRAY
25075	LIGHT GREEN
25076	DARK GREEN
25077	TANGERINE
25078	RED
25079	EXECUTIVE RED

WITH WATER RESISTANT
PRESSTEX®
COVERS

ACCO®

ACCO INTERNATIONAL INC.
CHICAGO, ILLINOIS 60618

Electronic Services - Los Angeles
M14094X
www.manualsplus.com
1020230